TWILIGHT: 2000™ 2nd Edition TM2011

HEAVY WEAPONS HANDBOOK™

Loren K. Wiseman

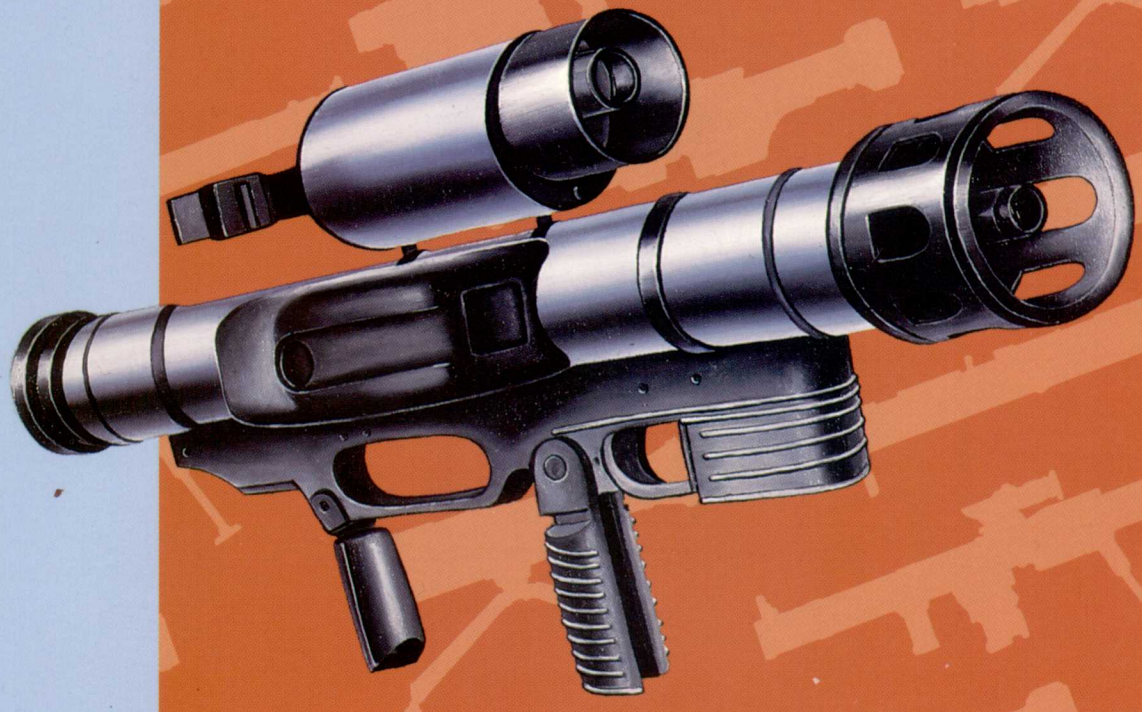

CDW

LAW 80

Type	*ROF*	*Rld*	*Rng*	*Round*	*Damage*	*Pen*
LAW 80	1	*	125	HEAT	C:6, B:4	100C

*Single-shot disposable. Cannot be reloaded.

LAW 80: The replacement for the M72 LAW in British service, the LAW 80 is a 94mm, disposable antitank rocket launcher. While it is quite a bit heavier than the M72, it has considerably improved performance.

Wt: 9.5 kg
Twilight: 2000 *Price:* $300 (R/—)
Merc: 2000 *Price:* $250 (—/C)

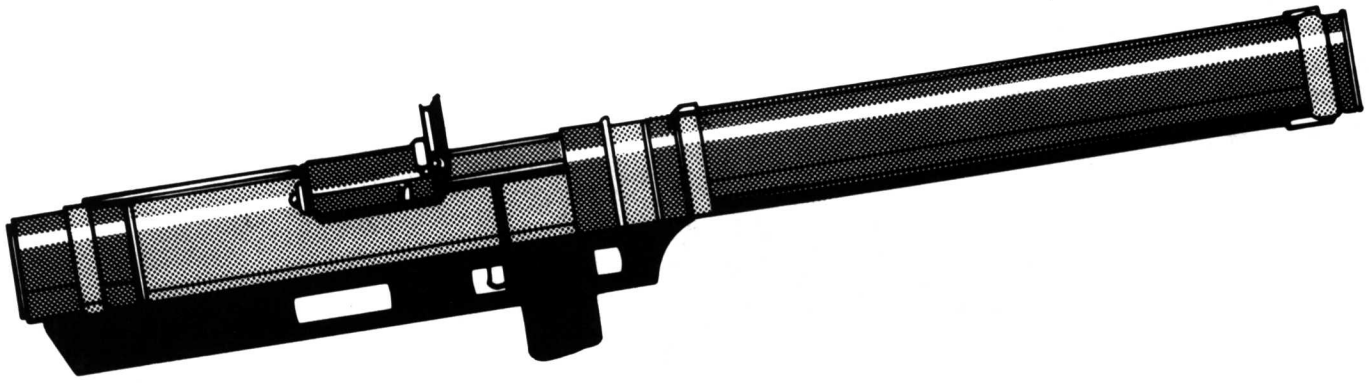

LRAC F1

Type	*ROF*	*Rld*	*Rng*	*Round*	*Damage*	*Pen*
LRAC F1	1	2	125	HEAT	C:4, B:4	70C

LRAC F1: This rocket launcher is the standard infantry antitank weapon of the French Army. It fires an 89mm HEAT warhead rocket.

Ammo: 89mm HEAT rocket
Rocket Wt: 2 kg
Launcher Wt: 8 kg
Twilight: 2000 *Rocket Price:* $175 (R/—)
Merc: 2000 *Rocket Price:* $40 (—/S)
Twilight: 2000 *Launcher Price:* $4500 (R/—)
Merc: 2000 *Launcher Price:* $650 (—/S)

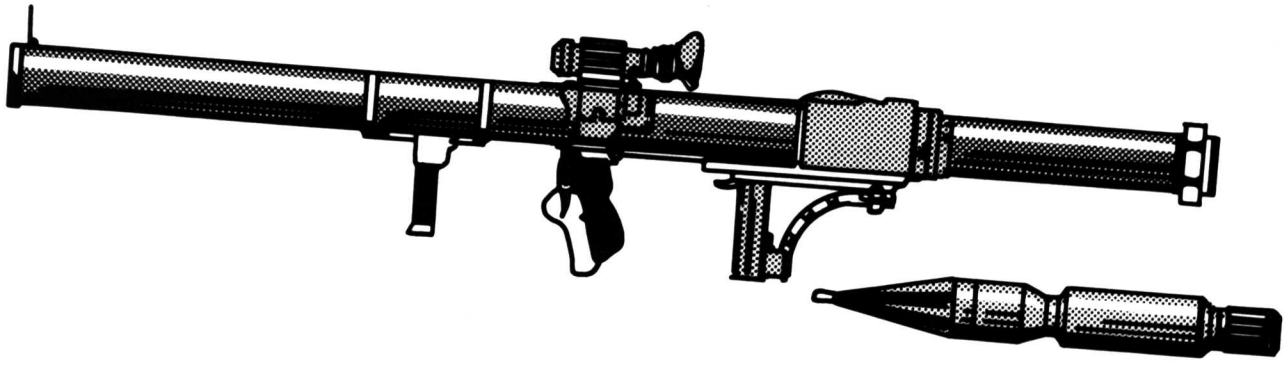

HEAVY WEAPONS HANDBOOK™

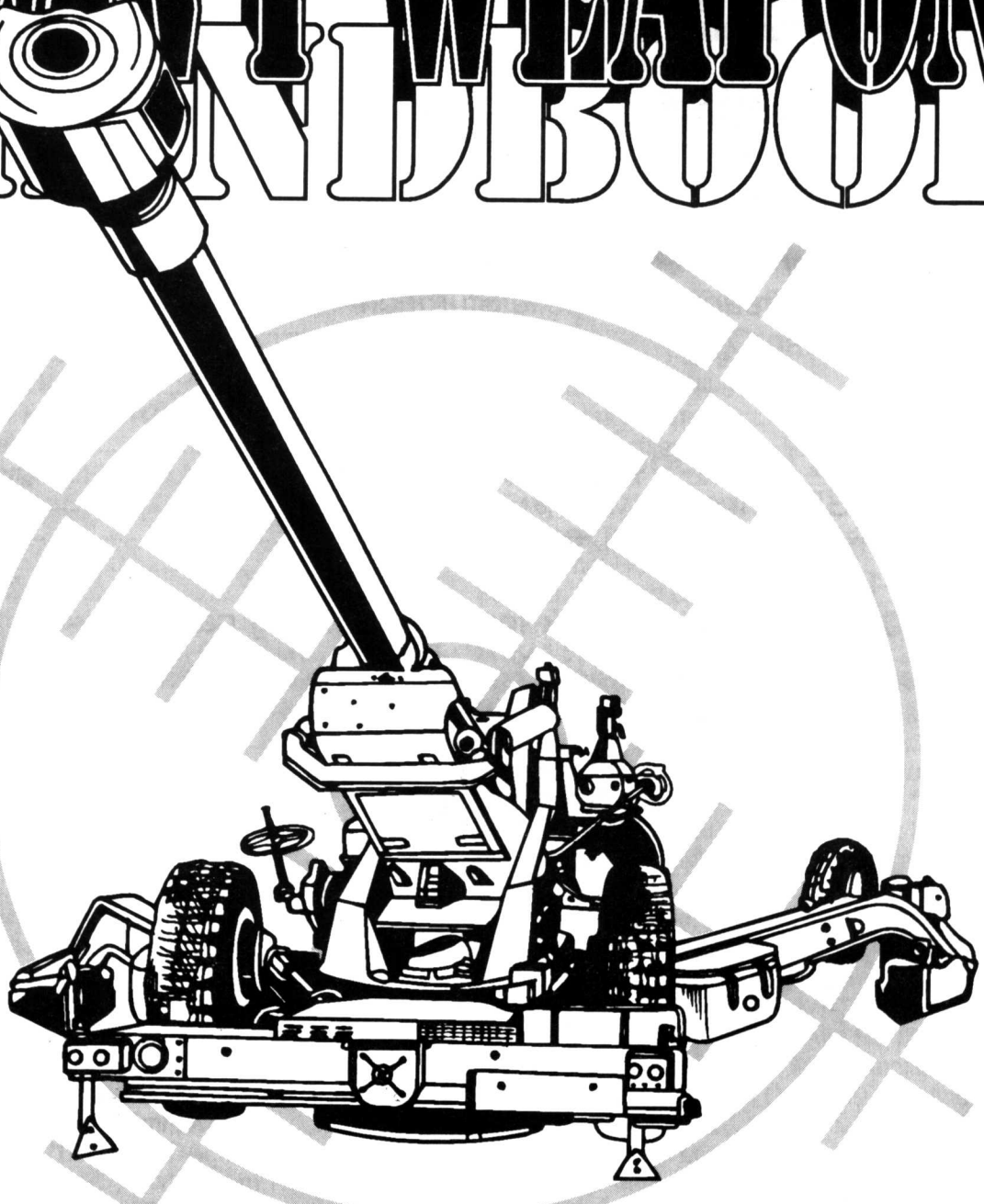

Loren K. Wiseman

GDW

CREDITS

Design: Loren K. Wiseman
Editing: Nick Atlas
Editing and Proofreading: Steve Maggi
Art Direction: Amy Doubet
Heavy Weapons Illustrations: Steve Bryant, LaMont Fullerton, Mark Fullerton, Kirk Wescom
Cover Art and Interior Color Plates: Grant Goleash
Typesetting and Proofreading: Michelle Sturgeon
Proofreading: Stephen Olle

Heavy Weapons Handbook
Copyright©1992 GDW, Inc.
Made in USA. Printed in USA. All rights reserved.
ISBN 1-55878-100-5
Twilight: 2000 is GDW's trademark for its roleplaying game of World War III.



P.O. Box 1646
Bloomington, IL 61702-1646

CONTENTS

Introduction **4**
Apilas, Armbrust 5
B-300, Eryx 6
LAW 80, LRACF1 7
M12 SMAW, M20A1 3,5" Bazooka 8
M72 Law, M136 9
RPG-7, RPG-16 10
RPG-18, RPG-22, RPG-27 11
RPG-75, Type 69 12
ADATS, AT-3 "Sagger" 13
AT-4 "Spigot," AT-7 "Saxhorn" 14
AT-8 "Songster," Dragon PIP 15
FOG-M 16
HOT, MILAN II, MILAN IIT 17
RBS-56 BILL, SS-11/ *Harpon* ATGM 18
Swingfire, Tank Breaker 19
TOW II TOW IIC, *Hong Jian*-8 (Red Arrow) 20
AGS-17, BG-1 21
HK-69, M79 22
M203, Mk-19 23
MM-1, TGS 24
Antitank Grenade, Chemical Grenade 25
Concussion Grenade, Fragmentation Grenade 26
White Phosphorus Grenade, BTU Rifle Grendade 27
Chemical Rifle Grenade, M31 HEAT Rifle Grenade 28
140mm RAW HE, 140mm RAW HEAT 29
US Rifle Grenade, Artemis 30mm LAAG 30
Bofors 40mm L60 ADA, Bofors 40mm L70 ADA 31
Breda 40mm L70 ADA 32
Breda Sentinel Twin 30mm ADA 32
Breda Twin 40 mm L70 ADA, D-48 85mm AT Gun 33
D-74 (M-1955) 122mm Gun 34
Giat 53T4 Twin 20mm ADA 34
Giat 76T2 Twin 20mm ADA 35
KS-12 (M-1939) 85mm AA 35
KS-19 100mm AA Gun, KS-30 130mm AA Gun 36
M-53 Twin 30mm ADA, M198 155mm Gun/Howitzer 37
M-1944 100mm AT Gun, M-1946 130mm Field Gun 38
M-1976 152mm Gun, M-1944 85mm AA Gun 39
M-1939 37mm AA, M-53/1 30mm ADA 40
M55 20/3 20mm Triple AA, M55 20/2 20mm Twin AA 41
M55 Quad .50 (12.7mm) ADA, M75 20/1 42
M 167 Towed PIVAD, M1966 76.2mm Mountain Gun 43
Oerlikon Iltis 25mm Infantry Gun 44
Oerlikon GAI C01/C04 20mm ADA 44
Oerlikon GAI-D01 Twin 20mm ADA 45
Oerlikon GBF-BOB Diana 25mm ADA 45
Oerlikon GBI-A01 25mm ADA 46
Oerlikon Twin 35mm ADA 46
Rapira-3 125mm AT Gun 47
Rheinmetal Twin 20mm ADA 47
Royal Ordnance 105mm Light Gun 48
S-23 (M-1955) 180mm Gun 48
Color Plates **49**
S-60 57mm AA Gun, SD-44 85mm AT Gun 57
D-44 85mm AT Gun 57
T-12 100mm AT Gun, TCM Twin 20mm ADA 58
TR 155mm Gun, Type 59 57mm ADA 59
Type 74 37mm ADA, Type 85 25mm ADA 60
ZPU-1/ZPU-2 14.5mm AA Gun 61
ZPU-4 14.5mm AA Gun 61
ZU-23-2 23mm AA Gun, ZU-23-4 23mm AA Gun 62
D-1 (M-1943) 152mm Howitzer 63
D-20 (M-1947) 152mm Howitzwer 63
D-30 122mm Howitzer, FH-70 155mm Gun-Howitzer 64
M-68 Soltam 155mm Gun-Howitzer 65
M-1931 (BM-4M) 203mm Howitzer 65
ADATS, Blowpipe 66
FIM-43 Redeye, FIM-92 Stinger 67
FIM-99 Scorpion, HN-5 68
Javelin, Matra Mistral 69
MBB-7 (Venusfliegenfalle), RBS-70, RBS-90 70
SA-7 Grail, SA-14 Gremlin 71
SA-16, SA-27 Grappler 72
Starstreak, Towed Rapier 73
B-10 82mm RCL, B-11 107mm RCL 74
Folgore, M3 Carl Gustav 75
L-6 Wombat 120mm RCL, M-59A 82mm RCL 76
M18A1 57mm RCL, M20 75mm RCL 77
M27A1 105mm RCL, M40A1 106mm RCL 78
M67 90mm RCL, SPG-9 73mm RCL 79
Type 36 RCL, Type 56 RCL 80
Type 65 RCL, AM2 B9 Vasilek 82mm Automatic Mortar 81
L5 81mm Mortar, L16A2 81mm Mortor 82
M-1937 82mm Mortar, M-1943 120mm Mortar 83
M-1952 240mm, M-1953 160mm Mortar 84
M29E1 81mm Mortar, M30 4.2" (107mm) Mortar 85
M224 60mm Mortar, Merlin 86
Strix, Thompson-Brandt 120mm Mortar 87
Wojo Combo Mortar, KhF-2 Chemical Mine 88
M14 APERS Mine, M15 Heavy AT Mine 89
M16A1 APERS Mine, M18A1 APERS Claymore Mine 90
M19 Plastic Heavy AT Mine, M21 Metallic AT Mine 91
M23 Chemical Mine, M24 Off-Route AT Mine 92
M25 APERS Mine, M26 APERS Mine 93
M66 Off-Route AT Mine, MON-50 APERS 94
PM APERS Mine, POMZ-2 APERS Mine 95
TM-46 AT Mine, TM-57 AT Mine 96
Wojo AT Mine, YaM5 AT Mine 97
HAFLA (*Handflampatronen*), LPO-50 Flamethrower 98
M9A2 Flamethrower, TPO-50 Flamethrower 99
122mm Rocket, RPU-14 140mm MRL 100
Type 63 107mm MRL, WP-8 140mm MRL 101
RM-70 122mm MRL 102
BM-27 220mm MRL 103

INTRODUCTION

This book is restricted to man-portable and towed weapons, plus a few exceptions. Ammunition specs are included on the cards with the weapons using them.

Although primarily intended for players and referees of **Twilight: 2000** and **Merc: 2000**, most ratings in this handbook can also be used with **Cadillacs and Dinosaurs, Dark Conspiracy** or any other game with the same basic system. A few weapons are specific to one particular game background and are not available to players of other games (such as the products of the Wojo factory in Krakow, which are specific to **Twilight: 2000**).

WEAPON ENTRIES

Crew-served weapons with crews of more than two are given crew ratings. Weapons with separate ammunition have the weight and price of such ammunition included with the basic weapon chart, except where repetition would take up too much space. The same general notes from the basic game apply to the weapon charts here: Penetration is equal to the listed value plus 2D6, and HEAT round penetrations are halved versus compound and reactive armor. Also, the same abbreviations apply.

WEAPON TYPES

All weapon types are as defined in the **Twilight: 2000** basic rules set. All require Heavy Weapons skill to fire, except grenade launchers, which are fired using Small Arms (Rifle) or Heavy Weapons skill, whichever is greater.

RULES ADDITIONS

Two modifications to the damage rules have proven useful:

Concussion: Damage from explosive concussion is rolled once, but the amount is applied to each hit location. For NPCs, the damage is applied only once since NPCs do not have hit locations.

Explosive Rounds: Characters subjected to a direct hit by an explosive round (where the round lands in the same square) suffer explosive damage in addition to normal concussion and fragmentation damage. A random hit location suffers XD6 damage, where X equals the round's Penetration value or its Concussion value times 2, whichever is greater. This rule enables characters to be shredded by LAWs, mortar rounds, etc.

TYPES OF ROUNDS

Each weapon can fire one or more types.

APDU (Armor Piercing Depleted Uranium): Essentially the same as an APFSDS (see below) round, but with a penetrator made of depleted uranium. The density and hardness of the DU penetrator considerably increases the ability of the round to penetrate armor. Depleted uranium is spent reactor fuel and is not dangerously radioactive.

APERS (Antipersonnel): A mine or type of round intended primarily for use against enemy soldiers. Specific designs differ.

APFSDS (Armor Piercing Fin Stabilized Discarding Sabot): The round consists of a subcaliber, finned penetrator (usually made of tungsten), surrounded by a full-bore, aluminum sabot (pronounced SAY-bow) in several pieces. Once the round leaves the barrel, the sabot falls away. The combination of a large propelling charge and a small-diameter penetrator results in very high muzzle velocity and armor penetration.

API or AP-I (Armor Piercing Incendiary): A nearly solid round containing a small amount of incendiary material in the base. Primarily used against armored vehicles or aircraft in the hopes of igniting fuel or other flammables.

APT or AP-T (Armor Piercing Tracer): An AP round with a tracer pellet (a compound that glows brightly when ignited by the heat of firing) in the base of the round to enable gunners and others to trace the path of their bullets. When fired, tracer rounds appear to be bright lines due to retinal imprinting.

CHEM (Chemical): A hollow shell which burns and releases a gas or smoke upon landing. The most common chemical is hexachloroethane (HC) smoke, and all prices listed are based on that round. Rounds may also be filled with irritant gas (double price), blood agent poisonous gas (triple price) or nerve gas (quadruple price). In all cases, the chemical cloud covers an area the width of the burst area and four times as long as the burst area. The cloud originates at the impact point of the round and stretches downwind.

CLGP (Cannon Launched Guided Projectile): A high-explosive round which homes on the reflection of a laser target designator. If a laser target designator is aimed at a vehicle or building, the round has a 90% chance of a direct hit.

FASCAM (Field Artillery Scatterable Mines): A hollow round containing antitank and antipersonnel mines. The round bursts in the air and scatters mines over an area 100 meters in radius from the burst point.

HE (High Explosive): A high-explosive round is a hollow casing containing an explosive compound. Set to detonate on impact or at a selected altitude, it is useful against infantry and some larger targets. It is the least expensive (and thus most common) indirect fire round used.

HEAT (High Explosive Antitank): A hollow shell filled with explosive compound. An inverted cone in the nose of the shell directs the explosive force forward into a high-energy jet of super-heated gas and molten metal, reducing the effectiveness of the round against soft targets but vastly increasing it against armor.

HEDP (High Explosive Dual Purpose): A hollow round containing an explosive compound filler with a shaped charge director in the nose to provide the round with an enhanced armor penetrating capability.

HESH (High Explosive Squash Head): A round consisting of plastic explosive, designed to flatten against the outside of an armored vehicle and detonate, causing fragments to break off inside the vehicle (a process known as spalling). This round is also known as HEP (high explosive plastique) or or HEP-T (high explosive plastique tracer).

HET or HE-T (High Explosive Tracer): An HE round with a tracer pellet in its base (see APT, above, for an explanation).

ICM (Improved Conventional Munitions): A hollow round filled with grenades. The round bursts in the air and scatters grenades over a large area. It is very effective against infantry.

ICM-DP (Improved Conventional Munitions, Dual Purpose): Similar to ICM, the ICM-DP round contains shaped charge grenades which have an improved effectiveness against armored targets, provided they achieve a direct hit.

ILLUM (Illumination): A hollow round containing a parachute flare which illuminates the area defined by the round's burst radius for two combat turns (one minute).

Powder Charges: Most artillery uses a fixed round which consists of a projectile and a brass casing with propellant. Some fire a round consisting of a projectile and a separate powder charge. One powder charge is consumed for each projectile fired.

WP (White Phosphorus): A hollow round filled with white phosphorus. Upon detonation, it scatters burning white phosphorus throughout its burst radius. WP rounds also generate thick white smoke.

Apilas

Type	*ROF*	*Rld*	*Rng*	*Round*	*Damage*	*Pen*
Apilas	1	2	200	HEAT	C:4, B:4	60C

Apilas: This is a French-built, shoulder-fired, medium antitank weapon (MAW), sold to a number of smaller armies in Europe and elsewhere.

Rocket Wt: 10 kg
Launcher Wt: 12 kg
***Twilight: 2000** Rocket Price:* $1000 (R/—)
***Merc: 2000** Rocket Price:* $750 (—/S)
***Twilight: 2000** Launcher Price:* $4000 (R/—)
***Merc: 2000** Launcher Price:* $3000 (—/S)

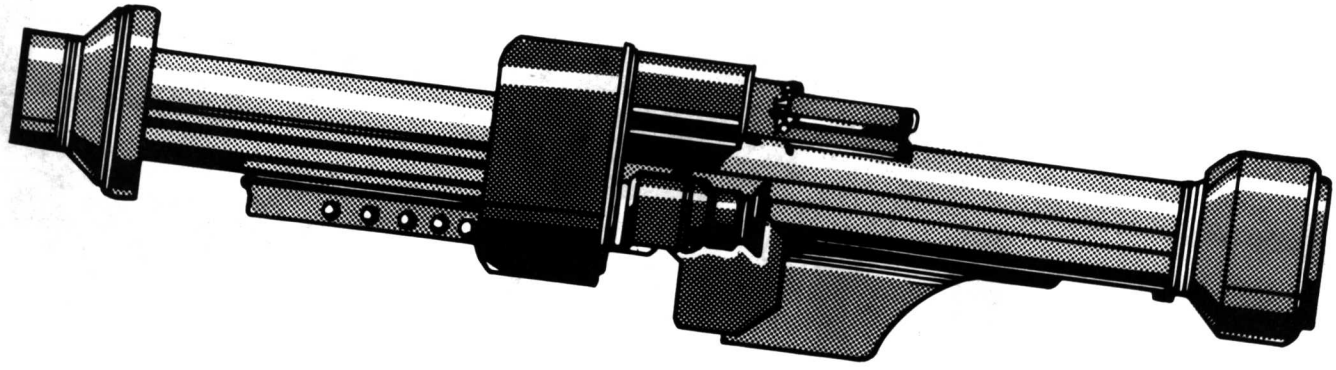

Armbrust

Type	*ROF*	*Rld*	*Rng*	*Round*	*Damage*	*Pen*
Armbrust	1	*	75	HEAT	C:4, B:4	55C

*Single-shot disposable. Cannot be reloaded.

Armbrust: The Armbrust is a single-shot, disposable, antitank rocket launcher. It was developed in Germany (then known as West Germany) and adopted by the US Army in the late 1980s.

Wt: 6 kg
***Twilight: 2000** Price:* $200 (S/R)
***Merc: 2000** Price:* $250 (—/V)

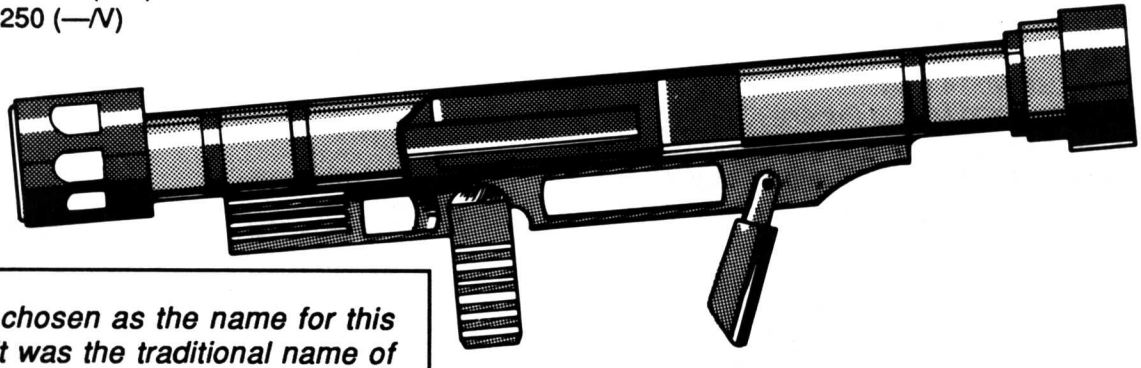

"Armbrust" was chosen as the name for this weapon because it was the traditional name of William Tell's crossbow.

B-300

Type	ROF	Rld	Rng	Round	Damage	Pen
B-300	1	2	100	HEAT	C:4, B:4	55C
			125	HE	C:12, B:12	5C

B-300: The B-300 is an Israeli design from which the M12 SMAW was derived.

Ammo: 82mm rocket

Rocket Wt: 0.2 kg, 7 kg per case of six

Launcher Wt: 3.5 kg

***Twilight: 2000** Rocket Price (HE and HEAT):* $75 each, $350 per case (S/—)

***Merc: 2000** Rocket Price (HE and HEAT):* $35 each, $180 per case (—/S)

***Twilight: 2000** Launcher Price:* $3000 (R/—)

***Merc: 2000** Launcher Price:* $650 (—/S)

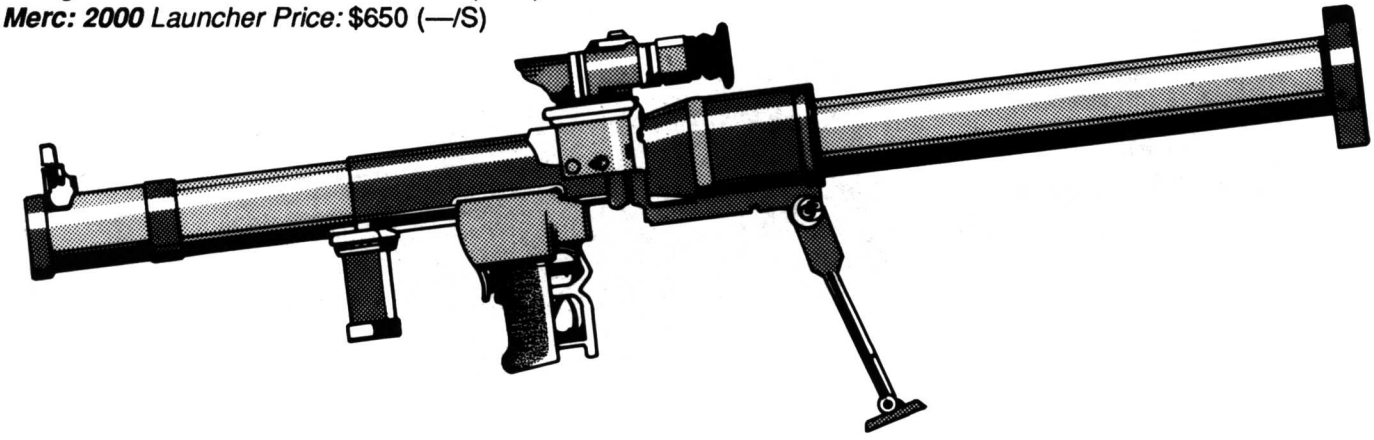

Eryx

Type	Rld	Max. Rng	Damage	Pen
Eryx	2	600	C:12, B:12	60C

Eryx: This is a French-built, wire-guided, short-range, man-portable antitank missile system designed for use in urban areas (hence the extremely short range). The Eryx was adopted in the early 1990s by the French Army and was sold extensively to other nations as well. The system's simple construction and relatively low price have made it very popular with smaller armies and mercenary units.

Missile Wt: 11 kg

Launcher Wt: 14.4 kg

***Twilight: 2000** Missile Price:* $900 (R/S)

***Merc: 2000** Missile Price:* $750 (—/S)

***Twilight: 2000** Launcher Price:* $1500 (R/S)

***Merc: 2000** Launcher Price:* $1000 (—/S)

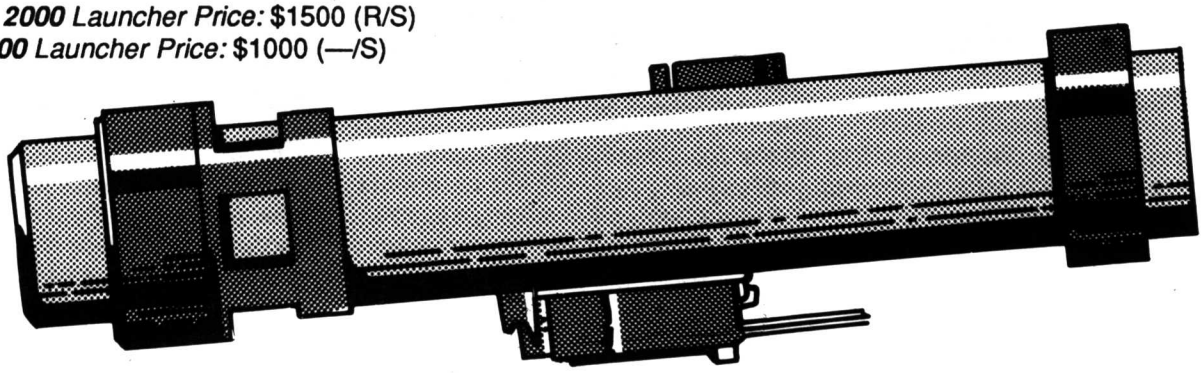

M12 SMAW

Type	ROF	Rld	Rng	Round	Damage	Pen
M12 SMAW	1	2	100	HEAT	C:4, B:4	55C
			125	HE	C:12, B:12	5C

M12 SMAW: A shoulder-fired "bunkerbuster" issued to US Marine troops, the M12 SMAW was never formally adopted by the US Army.

Ammo: 82mm SMAW (HE or HEAT)
Rocket Wt: 0.2 kg, 7 kg per case of six
Launcher Wt: 3.5 kg
***Twilight: 2000** Rocket Price (HE and HEAT):* $75 each, $350 per case (S/—)
***Merc: 2000** Rocket Price (HE and HEAT):* $35 each, $180 per case (—/S)
***Twilight: 2000** Launcher Price:* $3000 (R/R)
***Merc: 2000** Launcher Price:* $650 (—/C)

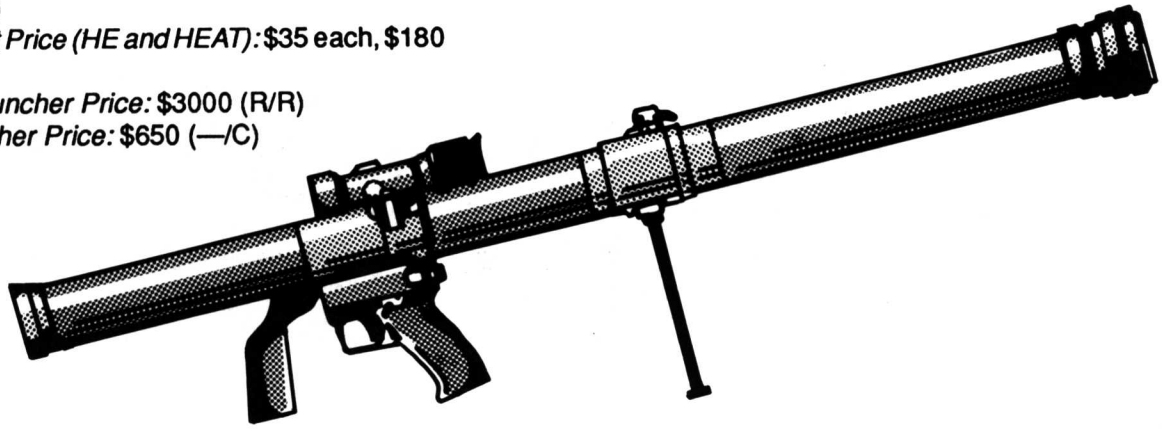

M20A1 3.5" Bazooka

Type	ROF	Rld	Rng	Round	Damage	Pen
M20A1	1	2	25	HEAT	C:3, B:4	55C

M20A1 3.5" Bazooka: The Bazooka is a rocket launcher developed by the United States during WWII. Field experience showed that the original design was not large enough to penetrate the armor of some of the larger German tanks, so the diameter was expanded to 3.5" (8.9 centimeters). No longer in use by the US Army, the Bazooka is still found in the arsenals of other nations.

Crew: 2
Rocket Wt: 2 kg
Launcher Wt: 4 kg
***Twilight: 2000** Rocket Price:* $175 (S/S)
***Merc: 2000** Rocket Price:* $100 (—/S)
***Twilight: 2000** Launcher Price:* $1050 (S/S)
***Merc: 2000** Launcher Price:* $750 (—/S)

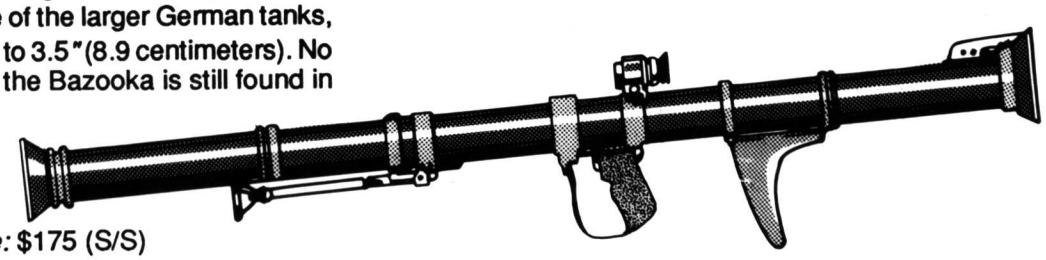

The word "Bazooka" is taken from a novelty musical instrument played by an American radio comedian in the early 1940s. The round was developed from a prototype antitank hollow charge hand grenade developed in 1939, with a rocket motor attached.



M72 LAW

Type	*ROF*	*Rld*	*Rng*	*Round*	*Damage*	*Pen*
M72 LAW	1	*	50	HEAT	C:3, B:4	55C

*Single-shot disposable. Cannot be reloaded.

M72 LAW: The M72 light antitank weapon (LAW) is a 66mm, disposable antitank rocket launcher. It is the standard light antitank weapon with the United States and many other nations.

Wt: 2 kg
Twilight: 2000 *Price:* $180 (S/R)
Merc: 2000 *Price:* $260 (—/V)

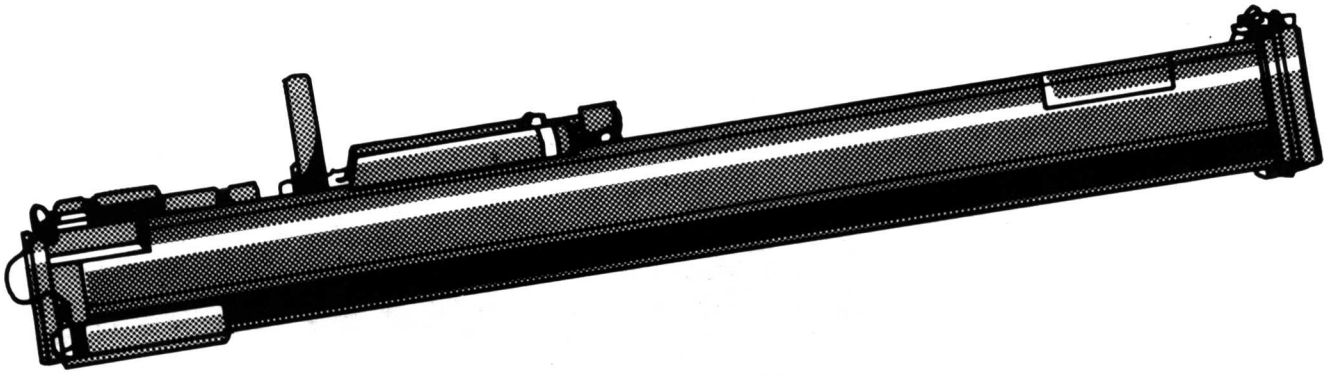

M136

Type	*ROF*	*Rld*	*Rng*	*Round*	*Damage*	*Pen*
M136	1	*	75	HEAT	C:4, B:4	70C

*Single-shot disposable. Cannot be reloaded.

M136: The original designation of this Swedish-designed weapon was AT-4, but it was referred to as the AT-4W to distinguish it from the Soviet AT-4 (the W standing for "Western"). The designation AT-4 was not part of any real numbering system and is said to be a play on the weapon's caliber (84mm). This disposable system was type-standardized by the US Army as the M136 in the early 1990s, and was used to supplement the Armbrust and M72 LAWs (light antitank weapons).

Wt: 6 kg
Twilight: 2000 *Price:* $200 (C/S)
Merc: 2000 *Price:* $250 (—/V)

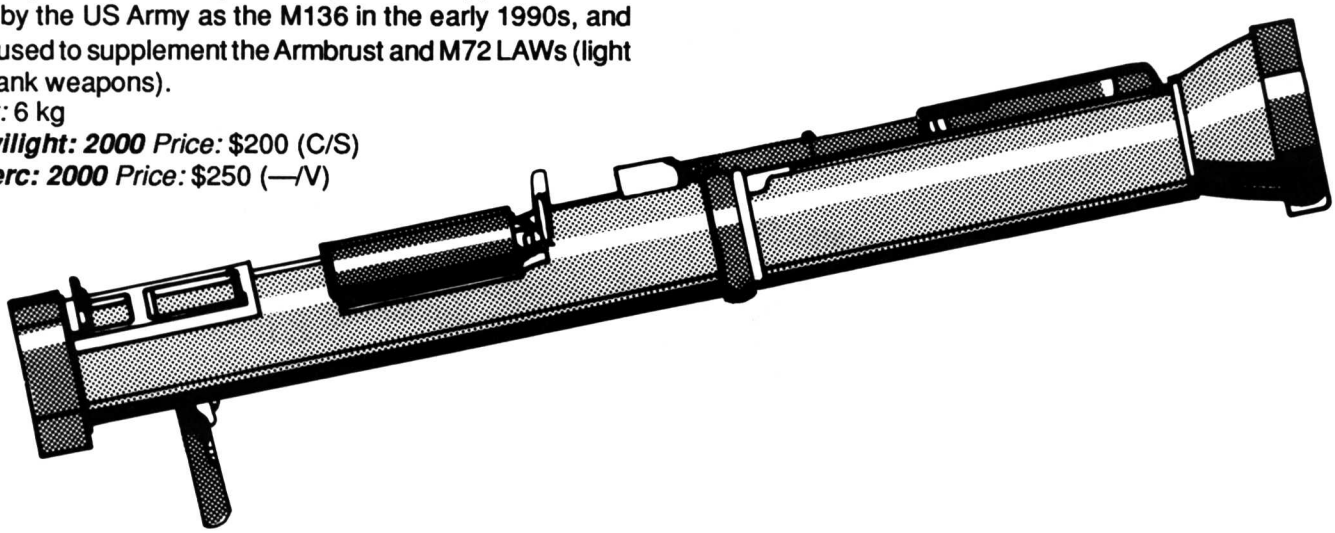

RPG-7

Type	ROF	Rld	Rng	Round	Damage	Pen
RPG-7	1	1	50	HEAT	C:4, B:4	55C

RPG-7: The RPG-7 (*Reaktivniy Protivotankoniy Granatomet-7* or rocket antitank grenade launcher-7) is the precursor to the RPG-16 and is still found in service in various armies around the world. Cheap and easily manufactured, the RPG series all use fin-stabilized rocket projectiles with HEAT warheads, loaded into the front end of the tubular launcher. The rockets' fins unfold in flight.

Rocket Wt: 3 kg, 10 kg per case of three

Launcher Wt: 6 kg

Twilight: 2000 *Rocket Price:* $45 each, $110 per case (S/C)

Merc: 2000 *Rocket Price:* $30 each, $85 per case (—/C)

Twilight: 2000 *Launcher Price:* $800 (S/C)

Merc: 2000 *Launcher Price:* $500 (—/C)

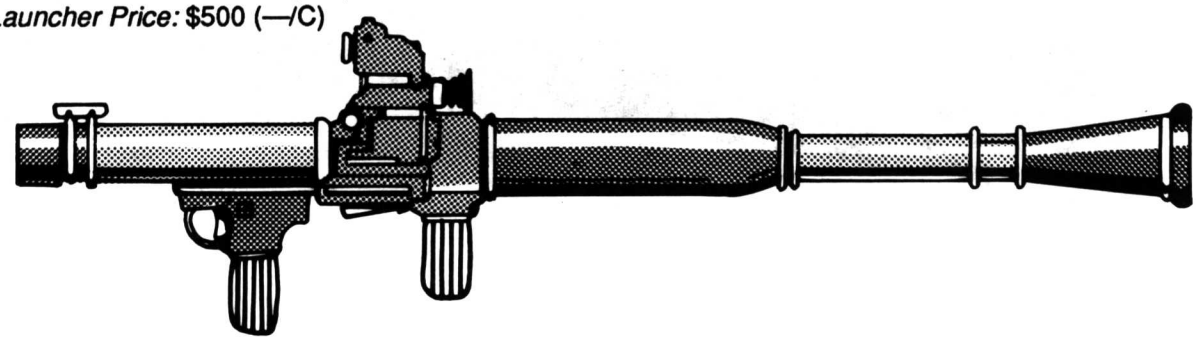

RPG-16

Type	ROF	Rld	Rng	Round	Damage	Pen
RPG-16	1	2	100	HEAT	C:6:, B:6	65C

RPG-16: The standard Warsaw Pact antitank rocket launcher, the RPG-16 is a development of the RPG-7.

Ammo: 58.3mm HEAT rockets

Rocket Wt: 3 kg, 10 kg per case of three

Launcher Wt: 10 kg

Twilight: 2000 *Rocket Price:* $50 each, $125 per case (R/S)

Merc: 2000 *Rocket Price:* $45 each, $100 per case (—/C)

Twilight: 2000 *Launcher Price:* $1000 (S/C)

Merc: 2000 *Launcher Price:* $450 (—/C)

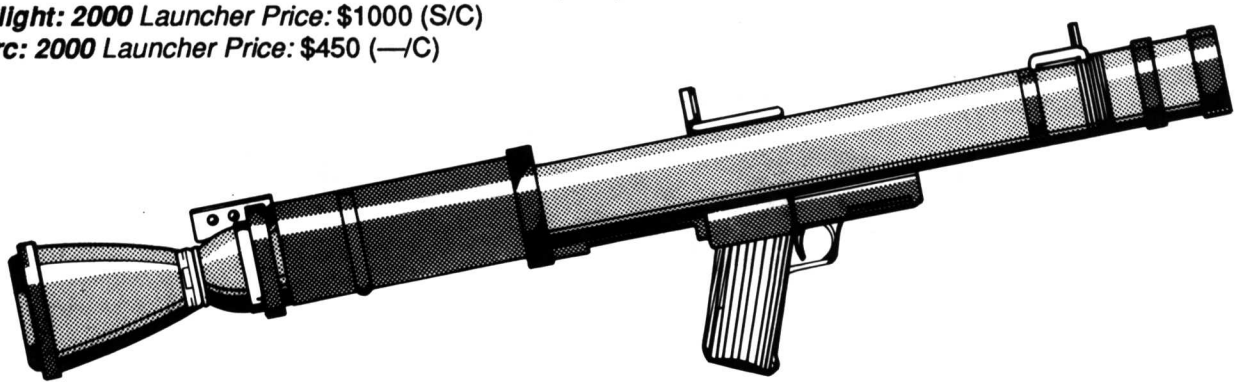

RPG-18 and RPG-22

Type	*ROF*	*Rld*	*Rng*	*Round*	*Damage*	*Pen*
RPG-18	1	*	75	HEAT	C:4, B:4	60C
RPG-22	1	*	80	HEAT	C:4, B:4	60C

*Single-shot disposable. Cannot be reloaded.

RPG-18 and RPG-22: These are Warsaw Pact disposable antitank rocket launchers, normally issued only to heliborne and airborne troops. The RPG-18 is copied from the US M72 LAW, while the RPG-22 is an improved version of the RPG-18.

Wt: 3 kg

RPG-18

Twilight: 2000 *Price:* $1000 (S/C)

Merc: 2000 *Price:* $250 (—/C)

RPG-22

Twilight: 2000 *Price:* $1100 (R/S)

Merc: 2000 *Price:* $350(—/S)

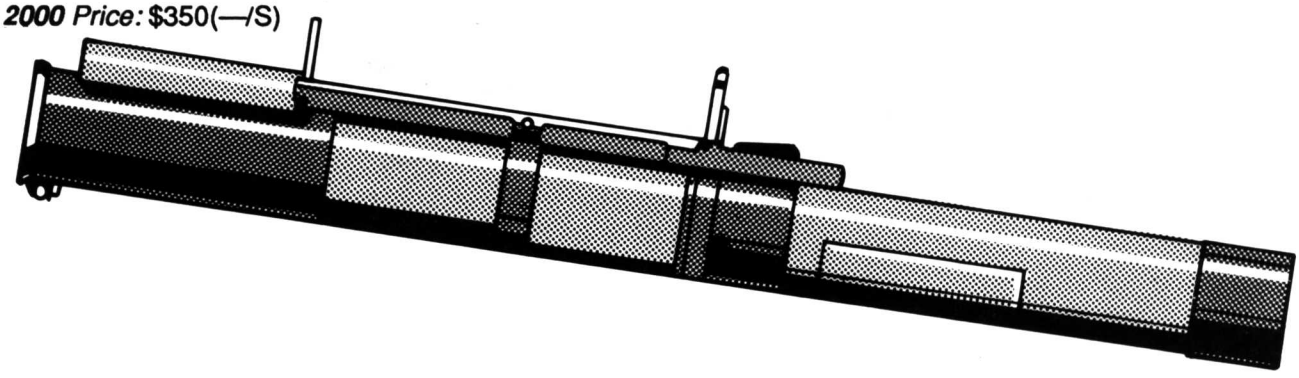

RPG-27

Type	*ROF*	*Rld*	*Rng*	*Round*	*Damage*	*Pen*
RPG-27	1	2	60	HEAT	C:4, B:4	45C

RPG-27: A Czech variant of the RPG series, the RPG-27 is still manufactured by the Skoda Works and is exported worldwide.

Rocket Wt: 3.8 kg

Launcher Wt: 3.8 kg

Twilight: 2000 *Rocket Price:* $50 (R/S)

Merc: 2000 *Rocket Price:* $35 (—/R)

Twilight: 2000 *Launcher Price:* $1050(R/S)

Merc: 2000 *Launcher Price:* $500 (—/S)

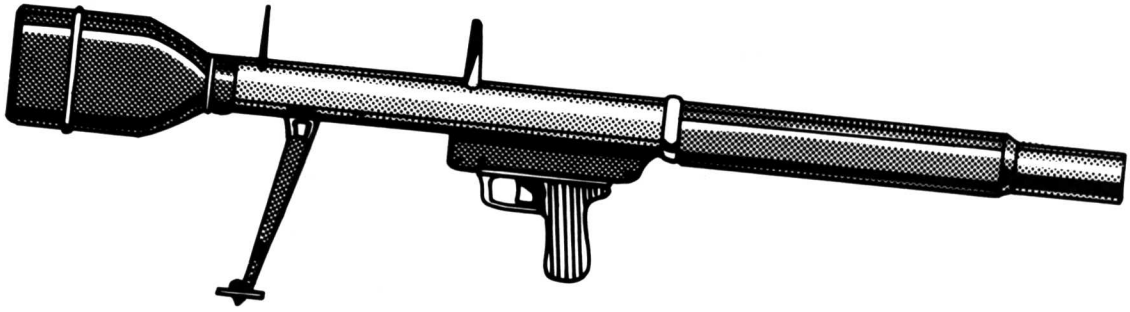

RPG-75

Type	*ROF*	*Rld*	*Rng*	*Round*	*Damage*	*Pen*
RPG-75	1	*	100	HEAT	C:4, B:4	55C

*Single-shot disposable. Cannot be reloaded.

RPG-75: The RPG-75 is a Czech-designed and -built disposable antitank rocket launcher. This weapon is manufactured in larger quantities than the RPG-22 and is thus more readily available.

Wt: 4 kg

***Twilight: 2000** Price:* $350 (—/R)

***Merc: 2000** Price:* $300 (—/S)

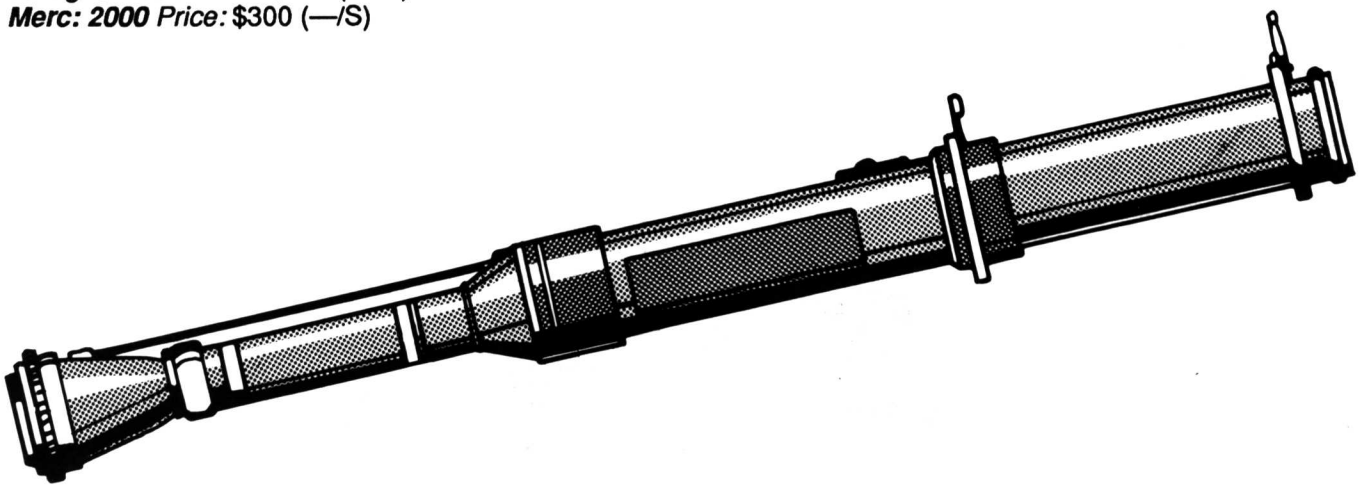

Type 69

Type	*ROF*	*Rld*	*Rng*	*Round*	*Damage*	*Pen*
Type 69	1	1	50	HEAT	C:4, B:4	60C

Type 69: The Type 69 is a Chinese-made, modified copy of the Soviet RPG-7 rocket launcher.

Rocket Wt: 3 kg, 10 kg per case of three

Launcher Wt: 6 kg

***Twilight: 2000** Rocket Price:* $40 each, $100 per case (S/C)

***Merc: 2000** Rocket Price:* $30 each, $85 per case (—/C)

***Twilight: 2000** Launcher Price:* $750 (S/C)

***Merc: 2000** Launcher Price:* $450 (—/C)

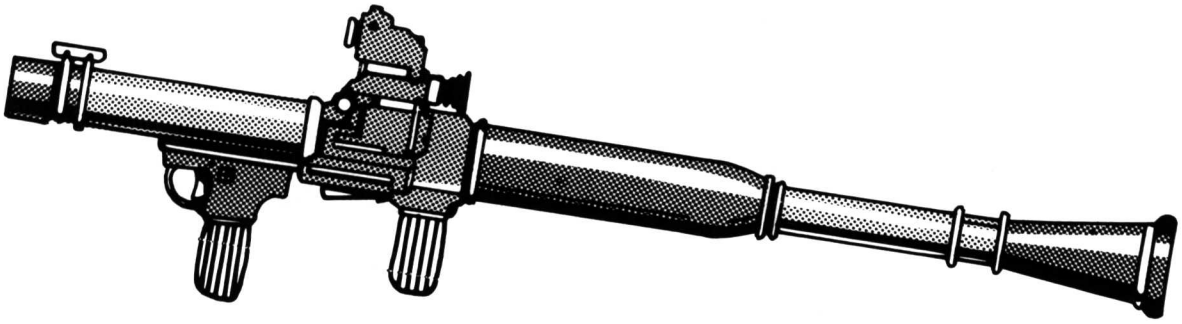

ADATS

ADATS: Developed by the Swiss as a private venture for export, the ADATS was adopted by the US Army as a heavy tactical missile for both air defense and antitank use (hence the name ADATS). Antitank stats are given below (Antiaircraft stats are on page 66).

Ammo: ADATS
Crew: 3
Missile Wt: 35 kg
Launcher Wt: 35 kg
***Twilight: 2000** Missile Price:* $3500 (R/—)
***Merc: 2000** Missile Price:* $3500 (—/S)
***Twilight: 2000** Launcher Price:* $5500 (R/—)
***Merc: 2000** Launcher Price:* $75,000 (—/S)

Type	*Rld*	*Max. Rng*	*Damage*	*Pen*
ADATS	1	6000	C:12, B:20	170C

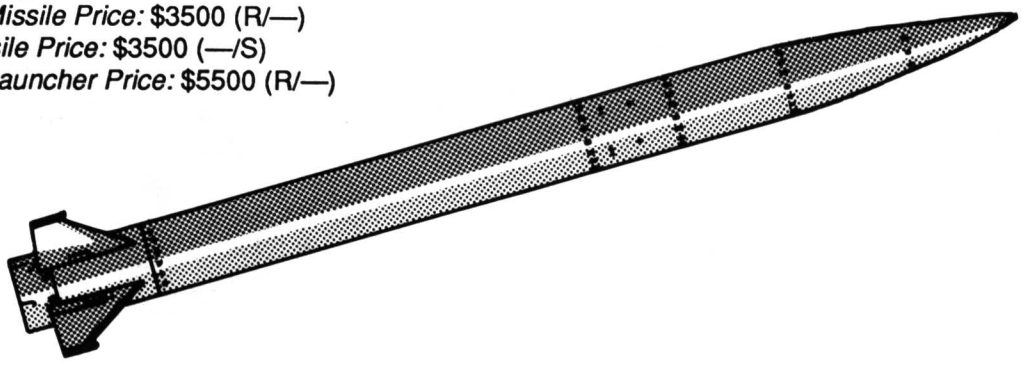

AT-3 "Sagger"

AT-3 "Sagger": Long since displaced in Soviet service by more modern weapons, the AT-3 Sagger continues in service in several other armies. The missile/launcher system is connected to the guidance/control system by a 30-meter cable.

Ammo: AT-3 "Sagger"
Missile Wt: 11 kg
Launcher Wt: 15 kg
***Twilight: 2000** Missile Price:* $1200 (R/S)
***Merc: 2000** Missile Price:* $900 (—/C)
***Twilight: 2000** Launcher Price:* $6000 (R/S)
***Merc: 2000** Launcher Price:* $4500 (—/C)

Type	*Rld*	*Max. Rng*	*Damage*	*Pen*
AT-3 "Sagger"	2	3000	C:6, B:4	75C

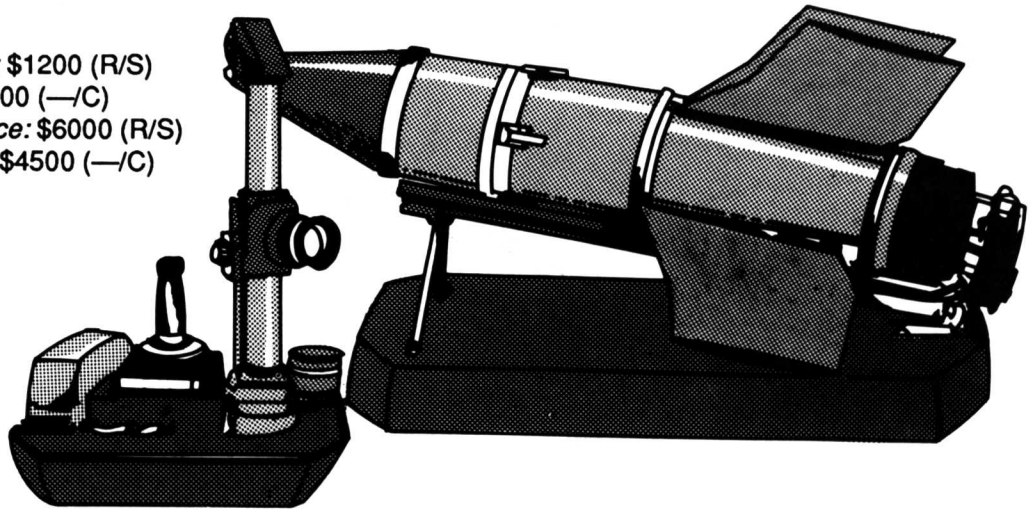

AT-4 "Spigot"

Type	*Rld*	*Max. Rng*	*Damage*	*Pen*
AT-4 "Spigot"	3	2000	C:6, B:4	100C

AT-4 "Spigot": A Soviet-designed, man-portable missile launcher, the AT-4 is fired from an integral tripod. The missile is wire guided, and the gunner must continue to aim at the target for the entire flight of the missile.

Ammo: AT-4 "Spigot"
Missile Wt: 7 kg
Launcher Wt: 5 kg
***Twilight: 2000** Missile Price:* $750 (R/S)
***Merc: 2000** Missile Price:* $500 (—/C)
***Twilight: 2000** Launcher Price:* $3000 (S/C)
***Merc: 2000** Launcher Price:* $7000 (—/C)

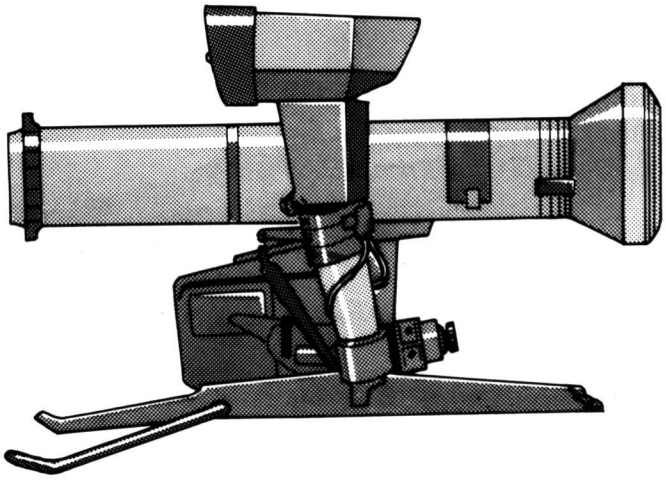

AT-7 "Saxhorn"

Type	*Rld*	*Max. Rng*	*Damage*	*Pen*
AT-7 "Saxhorn"	2	1000	C:12, B:12	100C

AT-7 "Saxhorn": The AT-7 "Saxhorn" is a man-portable antitank missile designed to give rifle squads some means of dealing with armored vehicles at medium to long range.

Missile Wt: 7 kg
Launcher Wt: 8 kg
***Twilight: 2000** Missile Price:* $1200 (—/R)
***Merc: 2000** Missile Price:* $9200 (—/R)
***Twilight: 2000** Launcher Price:* $1200 (—/R)
***Merc: 2000** Launcher Price:* $9000 (—/S)

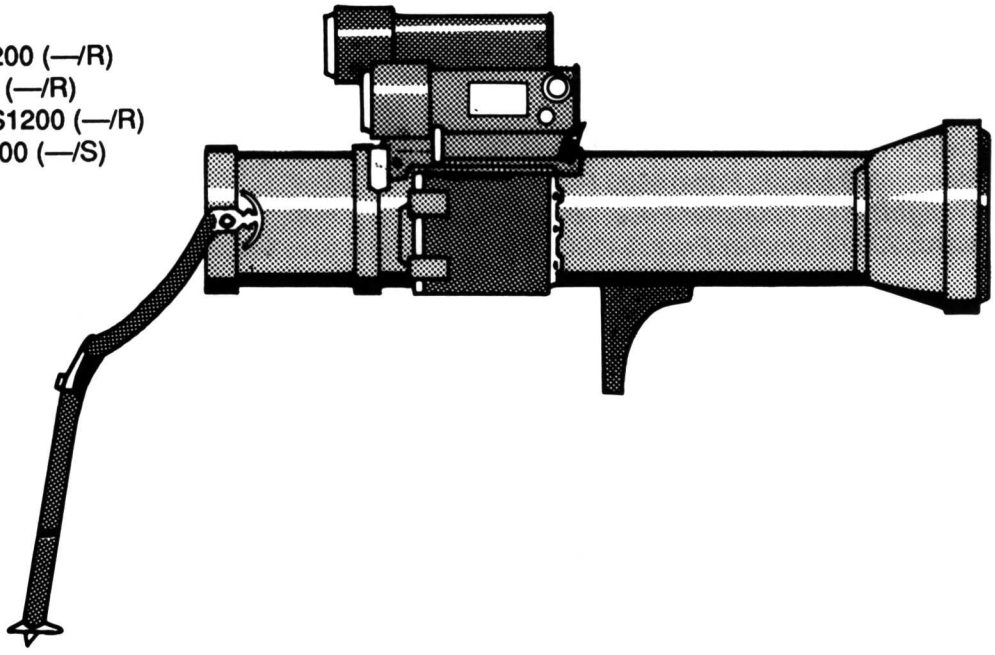

AT-8 "Songster"

Type	*Rld*	*Max. Rng*	*Damage*	*Pen*
AT-8 "Songster"	6	5000	C:12, B:12	115C

AT-8 "Songster": Dissatisfied with the long-range performance of their tank gun range finders, the Soviets developed the AT-8 "Songster" to fire from their tanks' gun tubes. Each AT-8 comes in two parts (propellant and warhead) and must be hand loaded by the gunner. Loading takes one complete 30-second combat turn.

Each AT-8 missile carried displaces one conventional cannon round.

Ammo: AT-8 "Songster"
Wt: 50 kg
Twilight: 2000 *Price:* $2000 (S/C)
Merc: 2000 *Price:* $1200 (—/R)

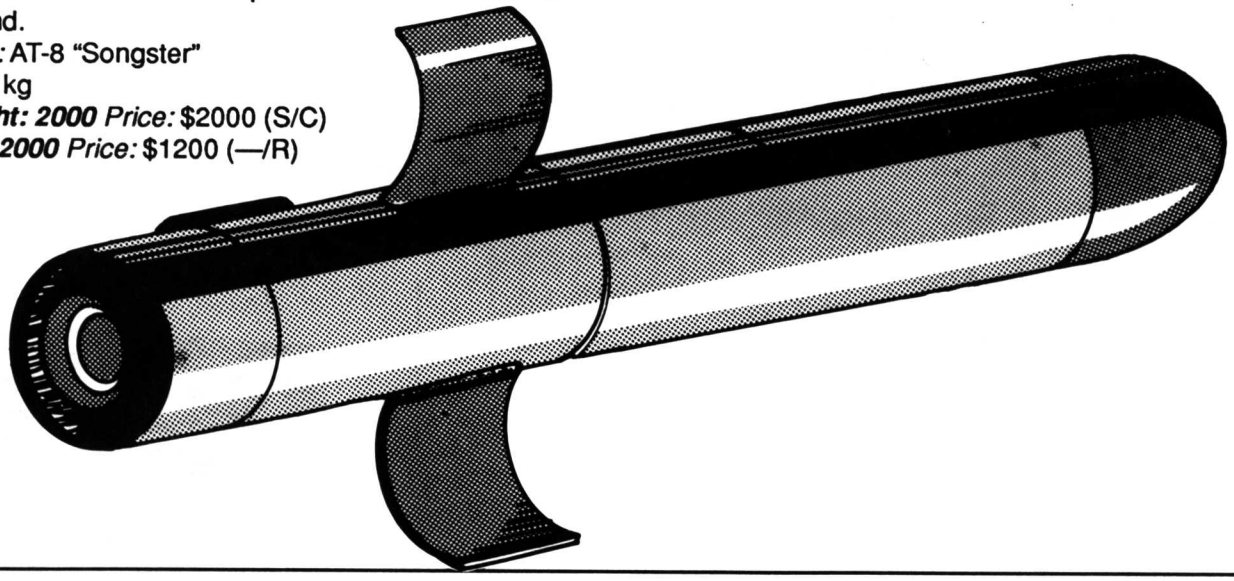

Dragon PIP

Type	*Rld*	*Max. Rng*	*Damage*	*Pen*
Dragon PIP	2	1000	C:12, B:12	135C

Dragon PIP: The Dragon PIP (product improved) is a man-portable antitank missile designed to give rifle squads some means of dealing with armored vehicles at medium to long range. It remains the standard medium antitank missile (MAW) of the US Army and several others.

Missile Wt: 7 kg
Launcher Wt: 8 kg
Twilight: 2000 *Missile Price:* $3000 (—/C)
Merc: 2000 *Missile Price:* $1200 (R/—)
Twilight: 2000 *Launcher Price:* $1200 (R/—)
Merc: 2000 *Launcher Price:* $9000 (—/C)

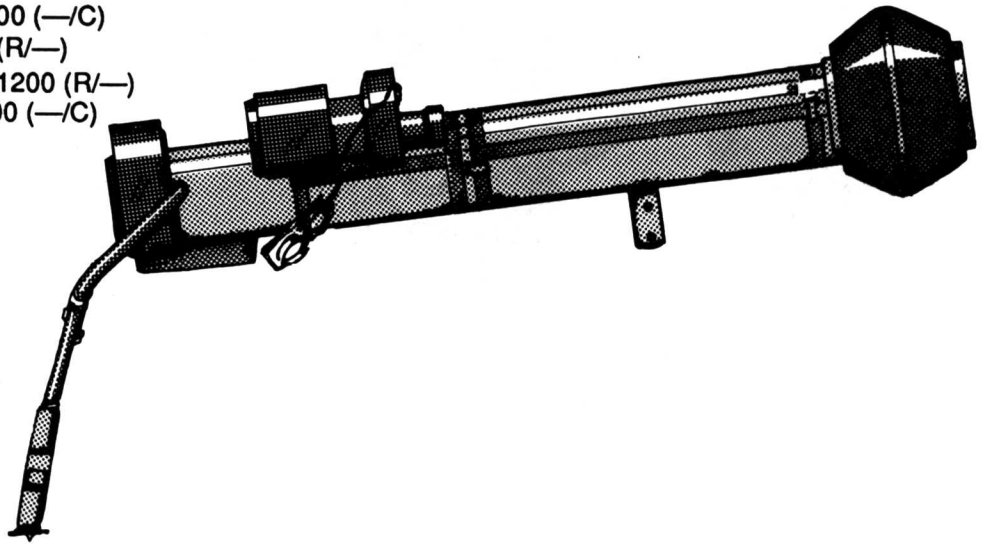

FOG-M

Type	*Rld*	*Max. Rng*	*Damage*	*Pen*
FOG-M AT	2	10000	C:12, B:12	160C

Missile	*Rng*	*Guidance*	*Acc. Level*
FOG-M AA	10000	TV	Easy

FOG-M: The FOG-M (fiber optic guided missile) is a dual-function antitank and antihelicopter televisually guided missile which uses a fiber optic data link to a remote control station. Other than increased range, treat this as a normal antitank guided missile per the rule on page 213 of **Twilight: 2000**. The manpack launcher fires one missile; the vehicle-mounted version shown here carries six, although the gunner can control only one at a time. Characteristics for the vehicle-mounted launcher are the same as for the standard Hummer, except that the launcher replaces the rear passenger compartment, and all cargo hits count as hits on the launcher.

Missile Wt: 38 kg
Manpack Launcher Wt: 26 kg (includes guidance controls)
***Twilight: 2000** Missile Price:* $6000 (—/—)
***Merc: 2000** Missile Price:* $7500 (—/R)
***Twilight: 2000** Manpack Launcher Price:* $12,000 (—/—)
***Merc: 2000** Manpack Launcher Price:* $16,000 (—/R)

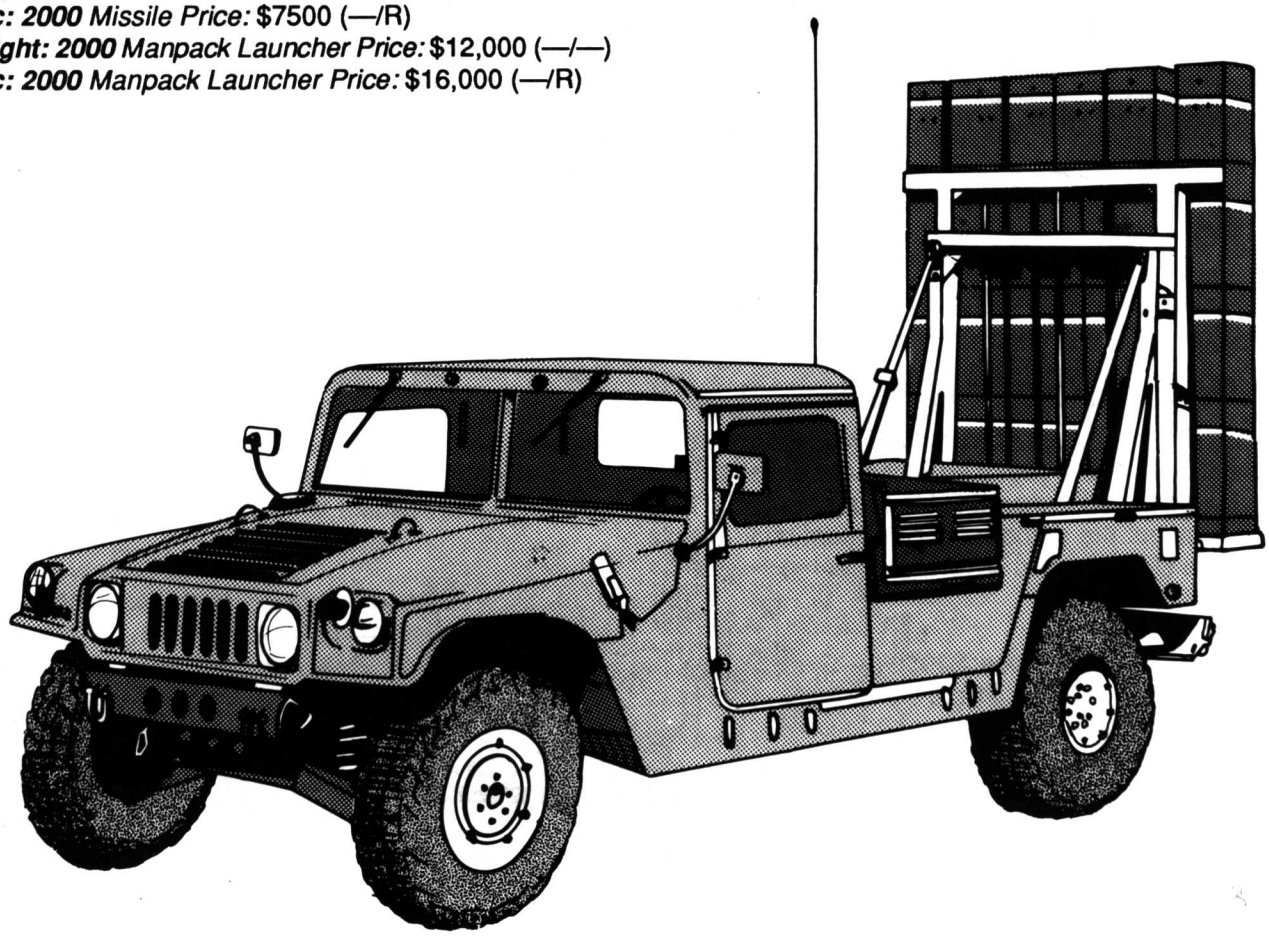

HOT

Type	*Rld*	*Max. Rng*	*Damage*	*Pen*
HOT	2	4000	C:12, B:12	155C

HOT: The HOT is a multinational antitank missile produced by a Franco-German consortium (Euromissile).

Ammo: HOT
Missile Wt: 20 kg
Launcher Wt: 30 kg
Twilight: 2000 *Missile Price:* $5500 (S/R)
Merc: 2000 *Missile Price:* $5500 (—/C)
Twilight: 2000 *Launcher Price:* $4500 (S/R)
Merc: 2000 *Launcher Price:* $9000 (—/C)

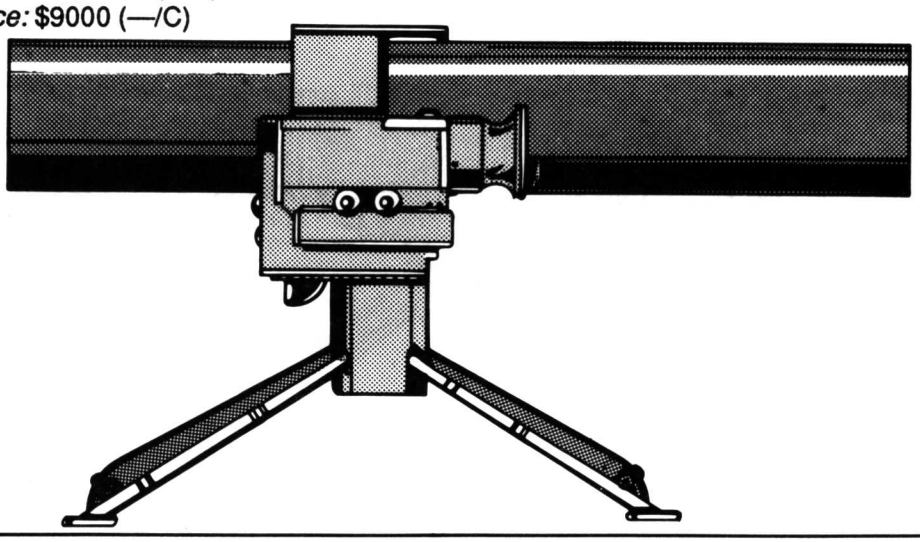

MILAN II and MILAN II-T

MILAN II and MILAN II-T: These missile launchers fire the MILAN II and MILAN II-T antitank missiles. The MILAN II-T is an overhead attack weapon like the Tank Breaker.

Launcher Wt: 17 kg
Twilight: 2000 *Launcher Price:* $6000 (R/S)
Merc: 2000 *Launcher Price:* $12,000 (—/C)

MILAN II
Missile Wt: 7 kg
Twilight: 2000 *Missile Price:* $3000 (C/S)
Merc: 2000 *Missile Price:* $8000 (—/C)

MILAN II-T
Missile Wt: 8 kg
Twilight: 2000 *Missile Price:* $4500 (C/S)
Merc: 2000 *Missile Price:* $9000 (—/C)

Type	*Rld*	*Max. Rng*	*Damage*	*Pen*
MILAN II	3	2000	C:12, B:12	145C
MILAN II-T	3	2000	C:12, B:12	145C

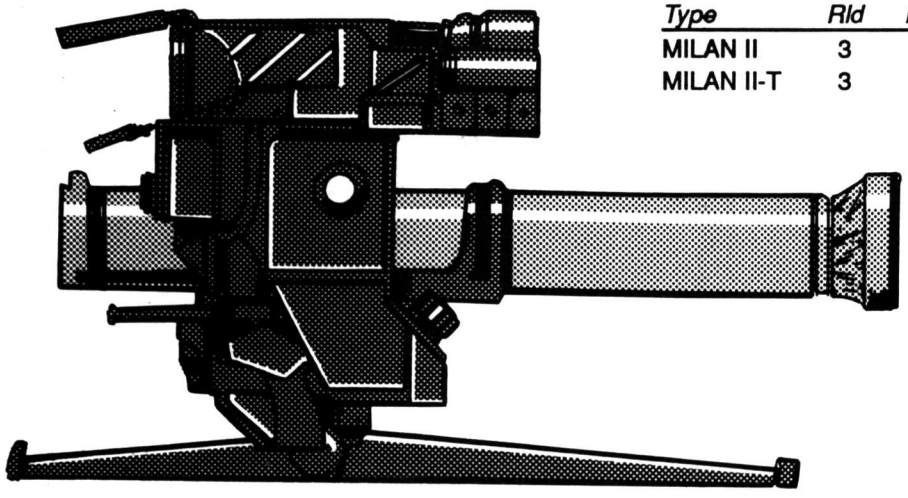

RBS-56 BILL

Type	*Rld*	*Max. Rng*	*Damage*	*Pen*
RBS-56 BILL	2	2000	C:8, B:8	30C

RBS-56 BILL: The Swedish-designed RBS-56 BILL, a wire-guided antitank missile, is one of the earliest of the overhead attack missiles.

Missile Wt: 20.5 kg
Launcher Wt: 15.5 kg
***Twilight: 2000** Missile Price:* $6000 (S/R)
***Merc: 2000** Missile Price:* $4500 (—/C)
***Twilight: 2000** Launcher Price:* $8500 (S/R)
***Merc: 2000** Launcher Price:* $10,000 (—/C)

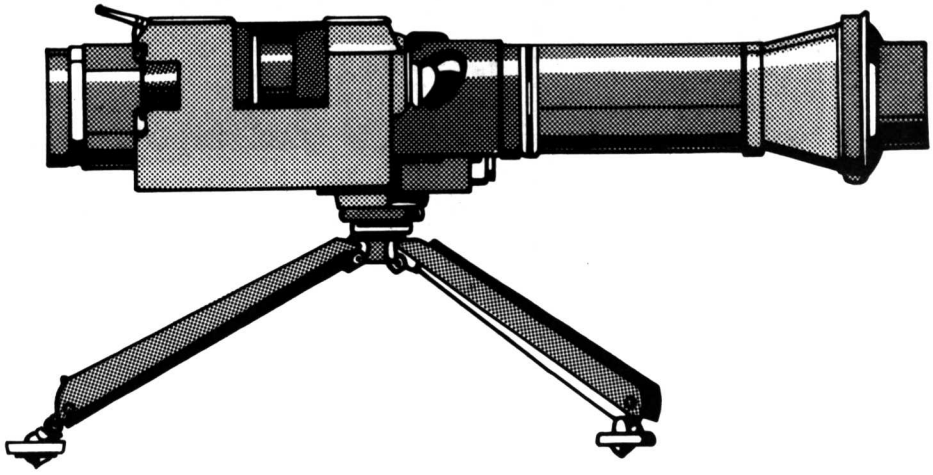

SS-11/*Harpon* ATGM

Type	*Rld*	*Max. Rng*	*Damage*	*Pen*
SS-11 HEAT	2	4000	C:8, B:8	120C
SS-11 APERS	2	3000	C:12, B:18	2C

SS-11/*Harpon* ATGM: The SS-11 is a French-built, wire-guided antitank missile. It is no longer in use by French forces, but it is still serving with several armies worldwide. The SS-11 is unique among ATGMs for having an antipersonnel (APERS) warhead in addition to the normal HEAT warhead. A vehicle-mounted version known as the *Harpon* (harpoon) is also available, with identical characteristics.

Missile Wt: 30 kg
Launcher Wt: 12 kg
***Twilight: 2000** Missile Price:* $1200 (R/—)
***Merc: 2000** Missile Price:* $900 (—/S)
***Twilight: 2000** Launcher Price:* $6000 (—/R)
***Merc: 2000** Launcher Price:* $4500 (—/S)

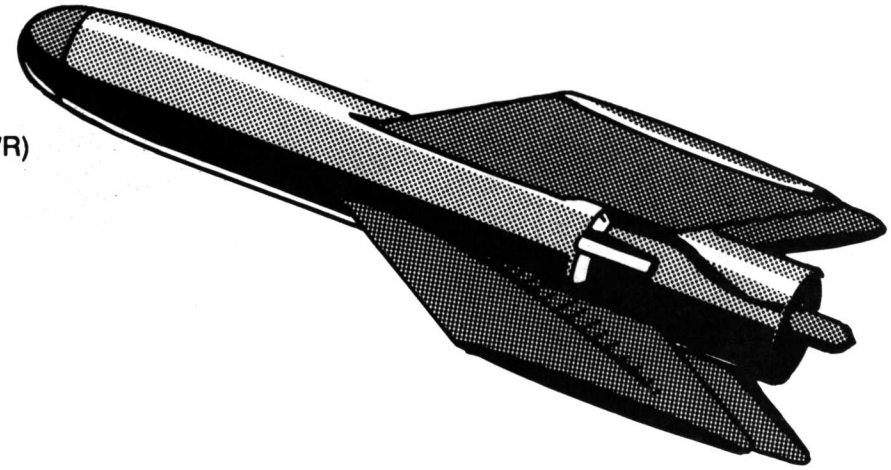

Swingfire

Type	*Rld*	*Max. Rng*	*Damage*	*Pen*
Swingfire	2	4000	C:12, B:12	100C

Swingfire: The Swingfire is a British antitank missile with a HEAT warhead, fired from a ground launcher or from a vehicle mount. The statistics below are for the ground launcher.

Ammo: Swingfire
Missile Wt: 20 kg
Launcher Wt: 20 kg
***Twilight: 2000** Missile Price:* $7500 (S/R)
***Merc: 2000** Missile Price:* $5500 (—/S)
***Twilight: 2000** Launcher Price:* $3000 (S/R)
***Merc: 2000** Launcher Price:* $55,000 (—/S)

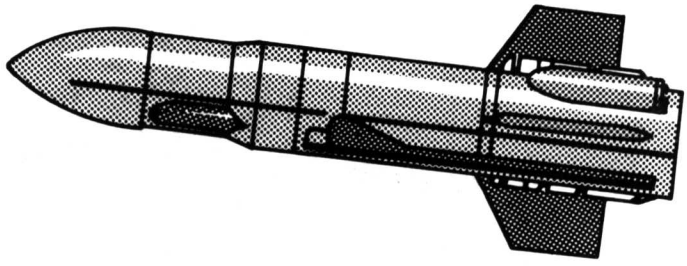

Tank Breaker

Type	*Rld*	*Max. Rng*	*Damage*	*Pen*
Tank Breaker	2	2000	C:6, B:4	90C

Tank Breaker: The Tank Breaker is a man-portable launcher fired from an integral rest. It fires a homing fire-and-forget missile which can be set to hit the target directly, or to fly over it and attack from above (where the armor is generally thinner).

Ammo: Tank Breaker
Missile Wt: 10 kg
Launcher Wt: 10 kg
***Twilight: 2000** Rocket Price:* $5000 (S/R)
***Merc: 2000** Rocket Price:* $9000 (—/R)
***Twilight: 2000** Launcher Price:* $5000 (S/R)
***Merc: 2000** Launcher Price:* $75,000 (—/S)

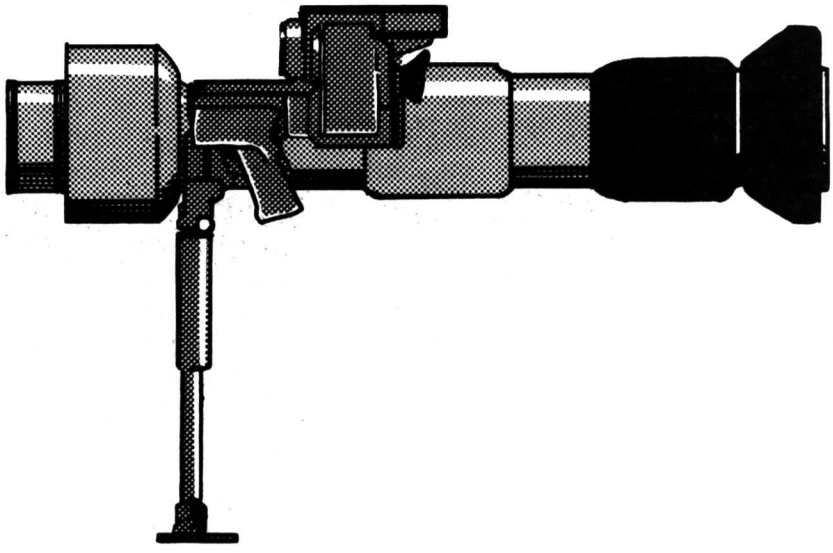

TOW II and TOW II-C

TOW II and TOW II-C: The TOW II missile is carried on the M2 Bradley, the M901 Hammerhead and numerous other vehicle mounts, including the tripod-mounted version detailed here. The missile is wire guided, and the gunner must continue to aim at the target for the entire flight of the missile. This launcher will also accept the TOW II-C (an overhead-attack missile).

Launcher Wt: 18 kg
Twilight: 2000 *Launcher Price:* $10,000 (S/R)
Merc: 2000 *Launcher Price:* $60,000 (—/C)

TOW II
Missile Wt: 28 kg
Twilight: 2000 *Price:* $1500 (S/R)
Merc: 2000 *Price:* $6500 (—/C)

TOW II-C
Missile Wt: 31 kg
Twilight: 2000 *Price:* $2100 (R/—)
Merc: 2000 *Price:* $7500 (—/S)

Type	*Rld*	*Max. Rng*	*Damage*	*Pen*
TOW II	2	3500	C:12, B:12	160C
TOW II-C	2	3500	C:12, B:12	160C

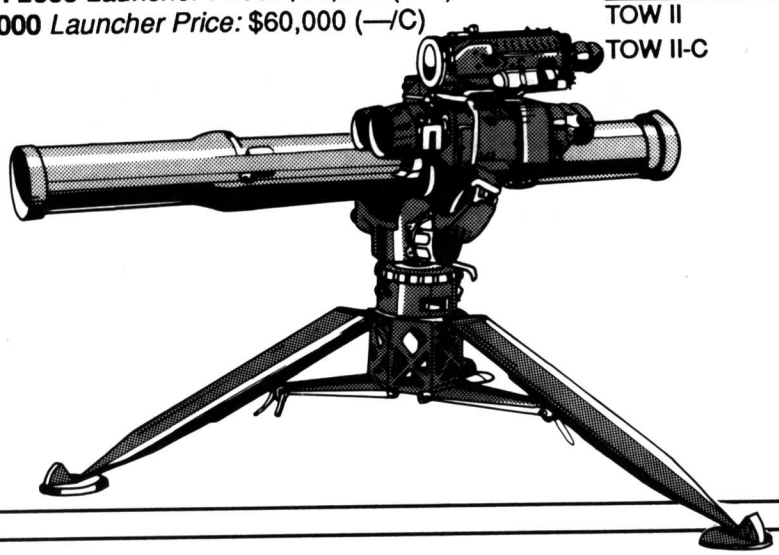

Hong Jian-8 (Red Arrow)

***Hong Jian*-8 (Red Arrow):** This is a Chinese-made, wire-guided antitank missile with elements taken from the US TOW and British Swingfire ATGMs.

Missile Wt: 22.5 kg
Launcher Wt: 63 kg
Twilight: 2000 *Missile Price:* $750 (R/S)
Merc: 2000 *Missile Price:* $500 (—/C)
Twilight: 2000 *Launcher Price:* $3000 (S/C)
Merc: 2000 *Launcher Price:* $7000 (—/C)

Type	*Rld*	*Max. Rng*	*Damage*	*Pen*
Hong Jian-8	2	3000	C:10, B:10	155C

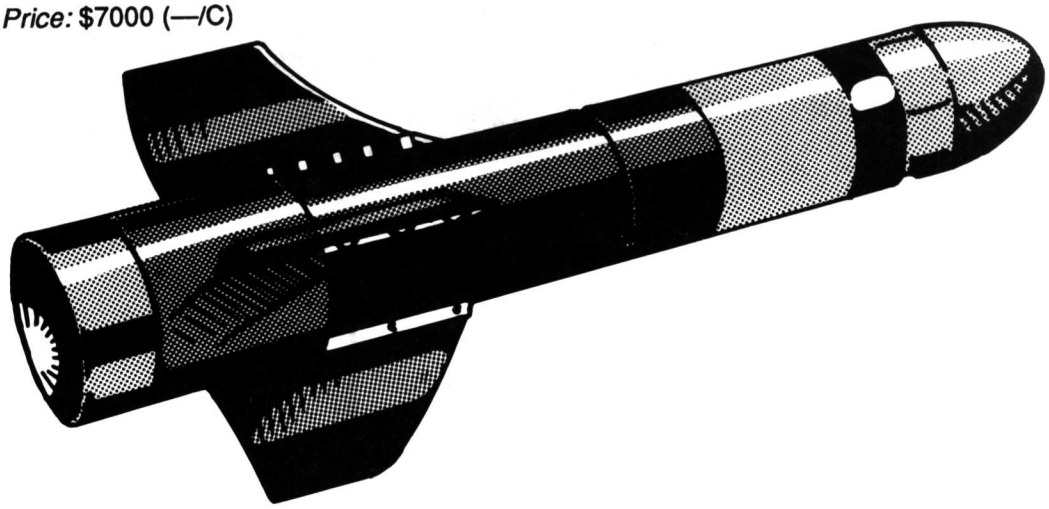

AGS-17

Type	*ROF*	*Mag*	*Rng*	*IFR*	*Rnd*	*Damage*	*Pen*
AGS-17	5	30D	150	1700	HE	C:2, B:12	Nil

AGS-17: The standard Warsaw Pact infantry support grenade launcher, the AGS-17 is a tripod-mounted (PMT), drum-fed, automatic grenade launcher. It may be fired only from its tripod or from a vehicle mount.

Ammo: 30mm HE grenades
Round Wt: 0.35 kg per round, 10 kg per 30-round drum
Weapon Wt: 18 kg
Mag: 30D
Twilight: 2000 *Round Price:* $3 each, $75 per drum (R/C)
Merc: 2000 *Round Price:* $2 each, $50 per drum (—/C)
Twilight: 2000 *Weapon Price:* $3000 (R/S)
Merc: 2000 *Weapon Price:* $1750 (—/R)

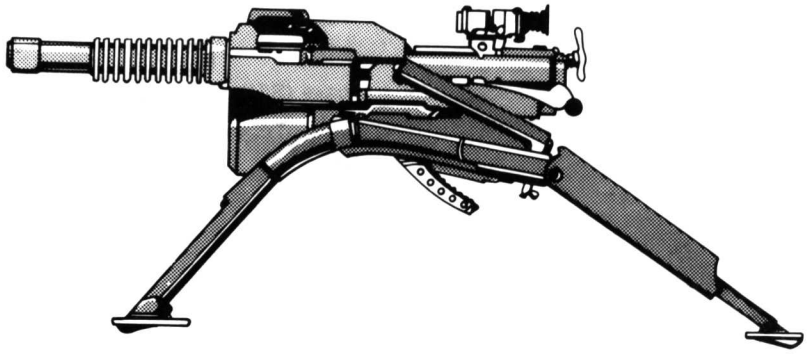

BG-1

Type	*ROF*	*Mag*	*Rng*	*IFR*	*Rnd*	*Damage*	*Pen*
BG-1	1	1i	100	300	HE	C:3, B:12	Nil
					HEDP	C:3, B:12	4C
					CHEM	C:1, B:4	Nil
					ILLUM	B:100	Nil

BG-1: This is the single-shot, underslung grenade launcher for the AK series of assault rifles, developed for Afghanistan. It can be fitted to any AK-series rifle. The 40mm grenades it fires are not compatible with US/NATO standard 40mm grenades and are designated 40mmS.

Ammo: 40mmS grenades
Round Wt: 0.3 kg per round, 34 kg per case of 100
Launcher Wt: 1 kg
Mag: 1i
Twilight: 2000 *Round Price:* $4 each, $200 per case (C/S)
Merc: 2000 *Round Price:* $3 each, $200 per case (—/V)
Twilight: 2000 *Launcher Price:* $700 (—/S)
Merc: 2000 *Launcher Price:* $400 (—/S)

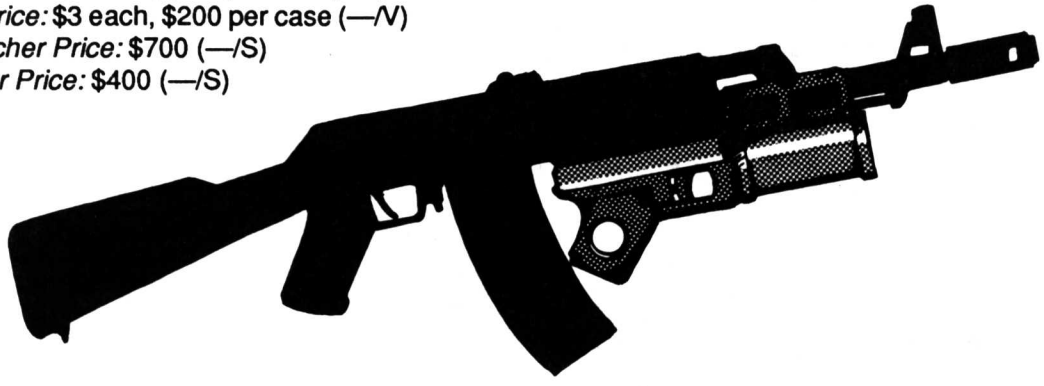

HK-69

HK-69: The standard infantry grenade launcher of the West German Army, the HK-69 can be attached to the bottom of any assault or battle rifle, or can be used as a separate weapon.

Ammo: 40mm grenades
Launcher Wt: 2 kg
Mag: 1i
***Twilight: 2000** Launcher Price:* $500 (S/R)
***Merc: 2000** Launcher Price:* $460 (—/C)

HE
Round Wt: 0.3 kg, 25 kg per case of 72
***Twilight: 2000** Round Price:* $4 each, $200 per case (C/S)
***Merc: 2000** Round Price:* $3 each, $200 per case (—/V)

HEDP
Round Wt: 0.3 kg, 25 kg per case of 72
***Twilight: 2000** Round Price:* $5 each, $250 per case (S/R)
***Merc: 2000** Round Price:* $4 each, $250 per case (—/C)

CHEM
Round Wt: 0.3 kg, 25 kg per case of 44
***Twilight: 2000** Round Price:* $4 each, $150 per case (S/R)
***Merc: 2000** Round Price:* $3 each, $120 per case (—/S)

ILLUM
Round Wt: 0.2 kg, 20 kg per case of 44
***Twilight: 2000** Round Price:* $6 each, $225 per case (S/R)
***Merc: 2000** Round Price:* $2 each, $75 per case (—/C)

Type	*ROF*	*Mag*	*Rng*	*IFR*	*Rnd*	*Damage*	*Pen*
HK-69	1	1i	100	400	HE	C:3, B:12	Nil
					HEDP	C:3, B:12	4C
					CHEM	C:1, B:4	Nil
					ILLUM	B:100	Nil

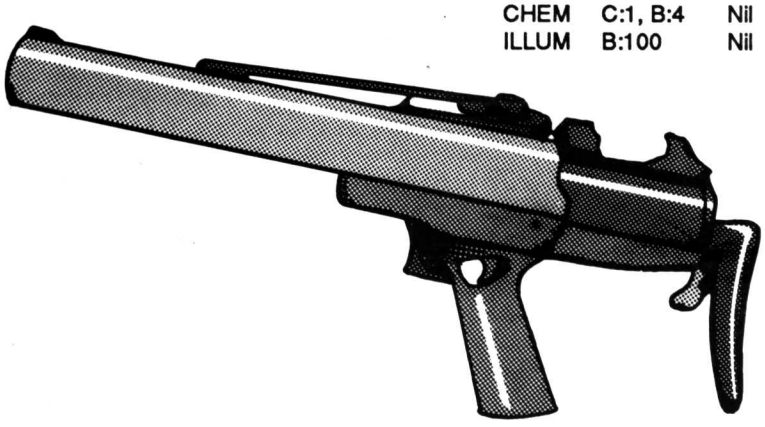

M79

M79: The M79 is a US-made, 40mm grenade launcher. It is in service with many foreign armies but has been replaced in the US Army by the M203. The M79 breaks open like a shotgun, and a single 40mm round is hand loaded into the breech.

Ammo: 40mm grenades
Launcher Wt: 2 kg
Mag: 1i
***Twilight: 2000** Launcher Price:* $500 (C/S)
***Merc: 2000** Launcher Price:* $450 (—/C)

HE
Round Wt: 0.3 kg, 25 kg per case of 72
***Twilight: 2000** Round Price:* $4 each, $200 per case (C/S)
***Merc: 2000** Round Price:* $3 each, $200 per case (—/V)

HEDP
Round Wt: 0.3 kg, 25 kg per case of 72
***Twilight: 2000** Round Price:* $5 each, $250 per case (S/R)
***Merc: 2000** Round Price:* $4 each, $250 per case (—/C)

CHEM
Round Wt: 0.3 kg, 25 kg per case of 44
***Twilight: 2000** Round Price:* $4 each, $150 per case (S/R)
***Merc: 2000** Round Price:* $3 each, $120 per case (—/S)

ILLUM
Round Wt: 0.2 kg, 20 kg per case of 44
***Twilight: 2000** Round Price:* $6 each, $225 per case (S/R)
***Merc: 2000** Round Price:* $2 each, $75 per case (—/C)

Type	*ROF*	*Mag*	*Rng*	*IFR*	*Rnd*	*Damage*	*Pen*
M79	1	1i	100	400	HE	C:3, B:12	Nil
					HEDP	C:3, B:12	4C
					CHEM	C:1, B:4	Nil
					ILLUM	B:100	Nil

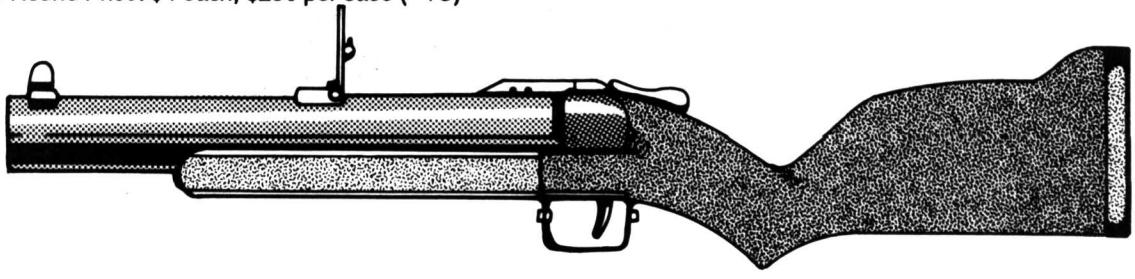

M203

M203: The standard infantry grenade launcher of the US and Canadian armies, the M203 is a single-shot launcher which is attached to the bottom of an M16 rifle. The M203 departs from most grenade launcher designs in that it uses a side-action instead of a shotgun-type action. A product improved (PI) model can be detached and fired from a removable shoulder stock, but by 1995, this model had not completely replaced older versions in military inventories.

Ammo: 40mm grenades
Launcher Wt: 1.4 kg (PI version, 2 kg)
Mag: 1i
***Twilight: 2000** Launcher Price:* $500 (C/S (PI version, $700) (S/R)
***Merc: 2000** Launcher Price:* $450 (—/C (PI version, $650) (—/S)

HE
Round Wt: 0.3 kg, 25 kg per case of 72
***Twilight: 2000** Round Price:* $4 each, $200 per case (C/S)
***Merc: 2000** Round Price:* $3 each, $200 per case (—/V)

HEDP
Round Wt: 0.3 kg, 25 kg per case of 72
***Twilight: 2000** Round Price:* $5 each, $250 per case (S/R)
***Merc: 2000** Round Price:* $4 each, $250 per case (—/C)

CHEM
Round Wt: 0.3 kg, 25 kg per case of 44
***Twilight: 2000** Round Price:* $4 each, $150 per case (S/R)
***Merc: 2000** Round Price:* $3 each, $120 per case (—/S)

ILLUM
Round Wt: 0.2 kg, 20 kg per case of 44
***Twilight: 2000** Round Price:* $6 each, $225 per case (S/R)
***Merc: 2000** Round Price:* $2 each, $75 per case (—/C)

Type	*ROF*	*Mag*	*Rng*	*IFR*	*Rnd*	*Damage*	*Pen*
M203	1	1i	100	400	HE	C:3, B:12	Nil
					HEDP	C:3, B:12	4C
					CHEM	C:1, B:4	Nil
					ILLUM	B:100	Nil

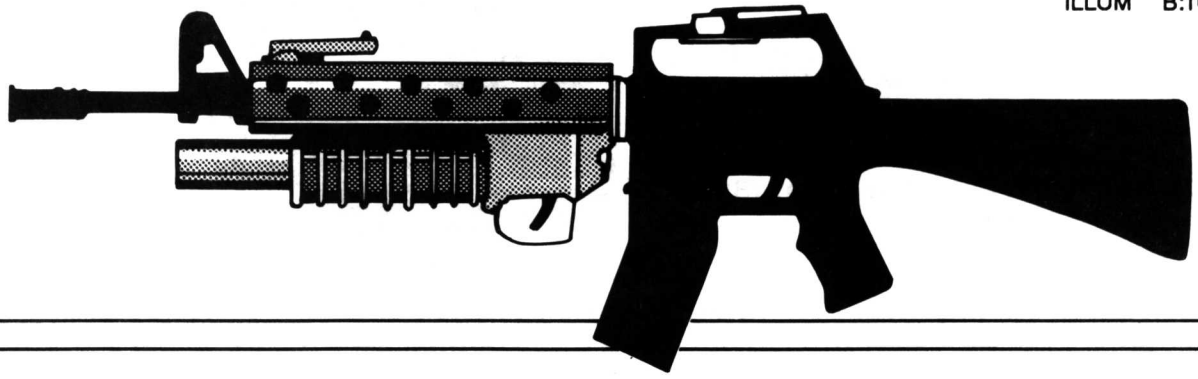

Mk-19

Mk-19: The standard infantry support grenade launcher in the US Army, the Mk-19 is a tripod-mounted (NHT), belt-fed, automatic weapon. It may also fire unbelted individual grenades (ROF 1). It may be fired only from a tripod or vehicle mount.

Ammo: 40mm grenades and 40mm high-velocity grenades
Weapon Wt: 40 kg
Mag: 50B or 1i
***Twilight: 2000** Weapon Price:* $5000 (S/R)
***Merc: 2000** Weapon Price:* $1800 (—/S)

HVHE
Round Wt: 0.4 kg, 25 kg per belt of 50
***Twilight: 2000** Round Price:* $6 each, $250 per case (S/R)
***Merc: 2000** Round Price:* $220 per case (—/S)

HVHEDP
Round Wt: 0.4 kg, 25 kg per belt of 50
***Twilight: 2000** Round Price:* $10 each, $400 per case (S/R)
***Merc: 2000** Round Price:* $6 each, $275 per case (—/S)

Type	*ROF*	*Mag*	*Rng*	*IFR*	*Rnd*	*Damage*	*Pen*
Mk-19	5	50B	200	3 km	HVHE	C:3, B:12	Nil
					HVHEDP	C:3, B:12	4C

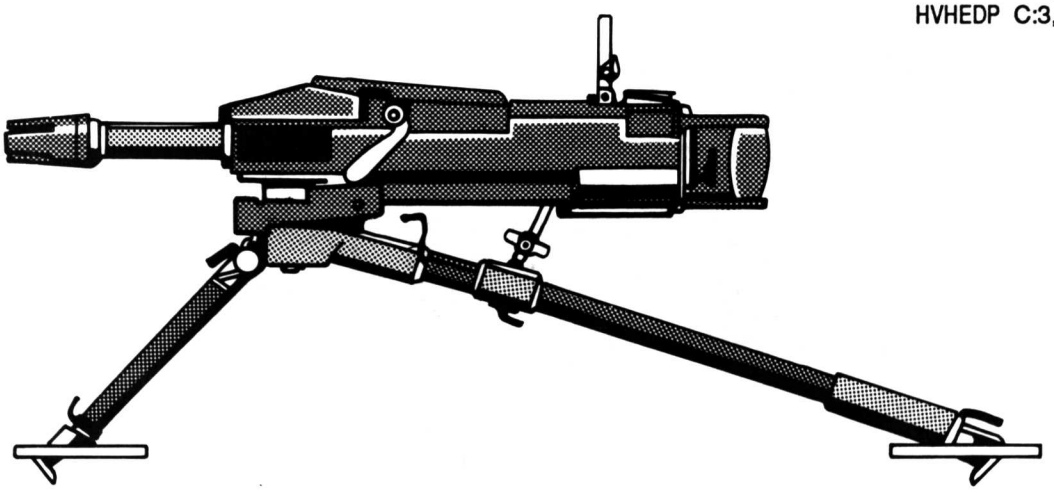

MM-1

MM-1: An American-built multiround grenade launcher resembling a large revolver, the MM-1 was not adopted by the US military, but has achieved a measure of popularity among mercenary groups. The large cylinder is spring loaded and hand wound, but the chambers can be rotated manually if necessary (reducing the ROF to 1). Loading four rounds takes one five-second combat phase. Winding the cylinder takes one five-second combat phase and cannot be done while rounds are being loaded. Not all chambers need to be loaded for the weapon to fire.

Originally built in 37mm, the MM-1 was soon manufactured in 40mm in response to user demand and will accept any standard 40mm round except the high velocity rounds used in the Mk-19.

Ammo: 40mm grenades
Weapon Wt: 9 kg
Mag: 12
***Twilight: 2000** Weapon Price:* $1000 (R/—)
***Merc: 2000** Weapon Price:* $850 (—/R)

HE
Round Wt: 0.3 kg, 25 kg per case of 72
***Twilight: 2000** Round Price:* $4 each, $200 per case (C/S)
***Merc: 2000** Round Price:* $3 each, $200 per case (—/V)

HEDP
Round Wt: 0.3 kg, 25 kg per case of 72
***Twilight: 2000** Round Price:* $5 each, $250 per case (S/R)
***Merc: 2000** Round Price:* $4 each, $250 per case (—/C)

CHEM
Round Wt: 0.3 kg, 25 kg per case of 44
***Twilight: 2000** Round Price:* $4 each, $150 per case (S/R)
***Merc: 2000** Round Price:* $3 each, $120 per case (—/S)

ILLUM
Round Wt: 0.2 kg, 20 kg per case of 44
***Twilight: 2000** Round Price:* $6 each, $225 per case (S/R)
***Merc: 2000** Round Price:* $2 each, $75 per case (—/C)

Type	*ROF*	*Mag*	*Rng*	*IFR*	*Rnd*	*Damage*	*Pen*
MM-1	5	12	100	400	HE	C:3, B:12	Nil
					HEDP	C:3, B:12	4C
					CHEM	C:1, B:4	Nil
					ILLUM	B:100	Nil

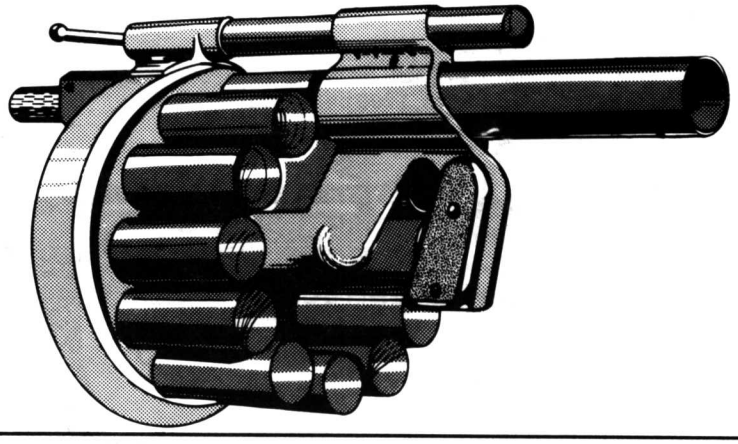

TGS

TGS: The TGS was designed as a replacement for the HK-69, but has not yet entered service in the German Army. It is scarce outside of German mercenary forces.

Weapon Wt: 1.2 kg
Mag: 1i
***Twilight: 2000** Launcher Price:* $500 (S/R)
***Merc: 2000** Launcher Price:* $450 (—/R)

HE
Round Wt: 0.3 kg, 25 kg per case of 72
***Twilight: 2000** Round Price:* $4 each, $200 per case (C/S)
***Merc: 2000** Round Price:* $3 each, $200 per case (—/V)

HEDP
Round Wt: 0.3 kg, 25 kg per case of 72
***Twilight: 2000** Round Price:* $5 each, $250 per case (S/R)
***Merc: 2000** Round Price:* $4 each, $250 per case (—/C)

CHEM
Round Wt: 0.3 kg, 25 kg per case of 44
***Twilight: 2000** Round Price:* $4 each, $150 per case (S/R)
***Merc: 2000** Round Price:* $3 each, $120 per case (—/S)

ILLUM
Round Wt: 0.2 kg, 20 kg per case of 44
***Twilight: 2000** Round Price:* $6 each, $225 per case (S/R)
***Merc: 2000** Round Price:* $2 each, $75 per case (—/C)

Type	*ROF*	*Mag*	*Rng*	*IFR*	*Rnd*	*Damage*	*Pen*
TGS	1	1i	100	400	HE	C:3, B:12	Nil
					HEDP	C:3, B:12	4C
					CHEM	C:1, B:4	Nil
					ILLUM	B:100	Nil

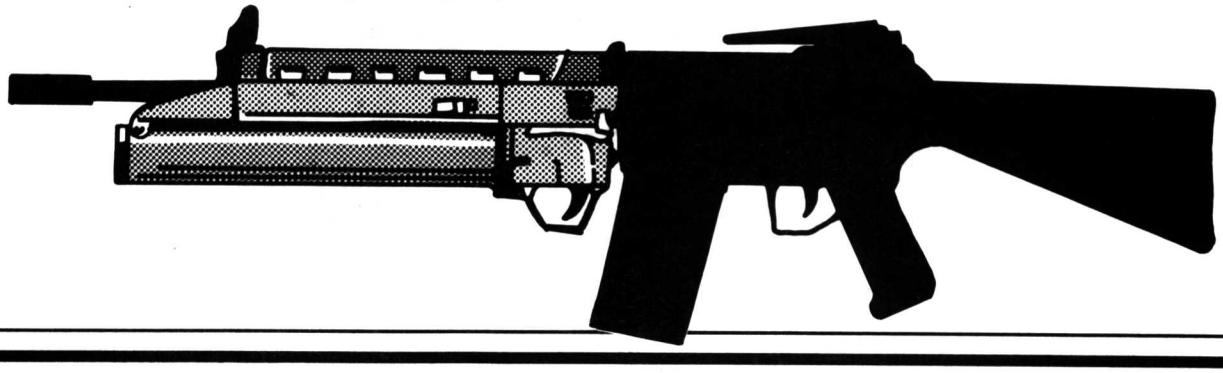

Antitank Grenade

Type	*Damage*	*Pen*
Antitank	C:3, B:4	18C

Antitank Grenade: This grenade is designed to explode on impact. It contains a shaped charge and is stabilized by fins (or by other means) so that the grenade flies with the shaped charge pointing forward.

Wt: 1 kg, 25 kg per case of 15

Twilight: 2000 *Price:* $10 each, $120 per case (R/S)

Merc: 2000 *Price:* $24 each, $325 per case (—/C)

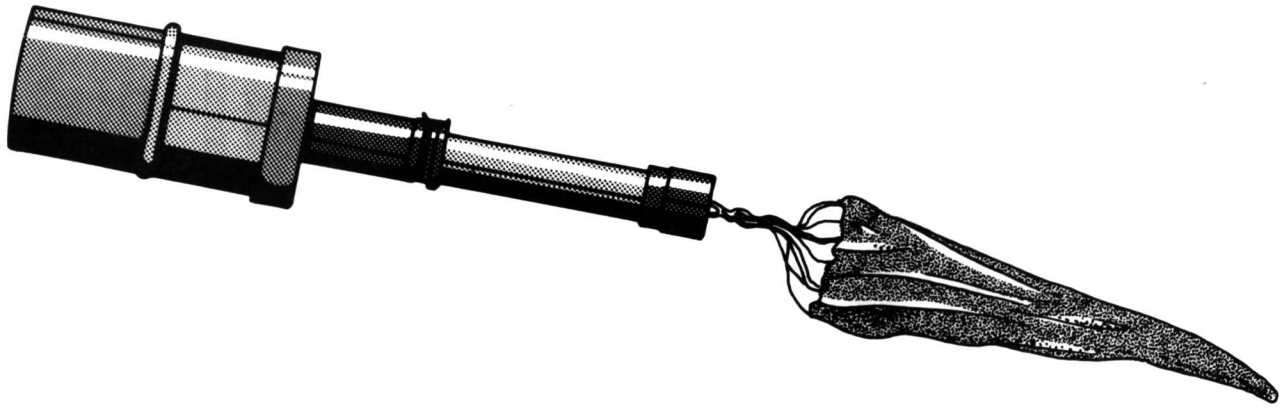

Chemical Grenade

Type	*Damage*	*Pen*
Chemical	C:1, B:12	Nil

Chemical Grenade: The chemical grenade is the same as a chemical round for large-caliber guns. Three types are available: HC smoke, colored smoke (red, yellow, green and purple) and irritant gas.

Wt: 0.5 kg, 16 kg per case of 16

Twilight: 2000 *Price:* $3 each, $40 per case for smoke, double prices for irritant (smoke, C/S; irritant, S/R)

Merc: 2000 *Price:* $18 each, $250 per case for smoke, double prices for irritant (smoke, C/S; irritant, S/R)

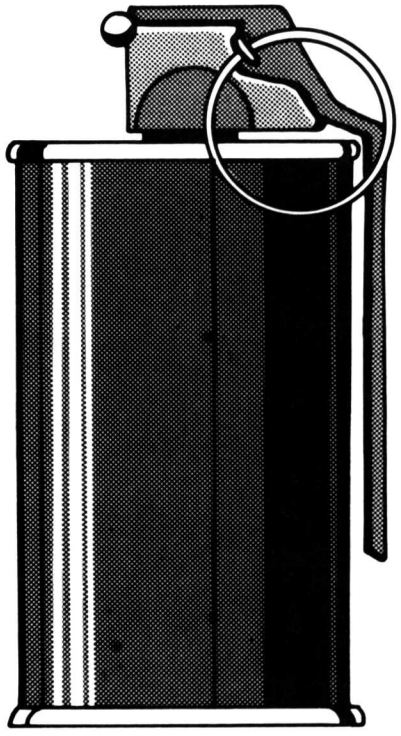

Concussion Grenade

Type	*Damage*	*Pen*
Concussion	C:5	Nil

Concussion Grenade: The grenade consists of explosive filler in a cardboard or plastic container. Upon explosion, it will knock people down but will cause no lethal fragmentation.

Wt: 0.5 kg, 20 kg per case of 20
Twilight: 2000 *Price:* $4 each, $70 per case (C/S)
Merc: 2000 *Price:* $8 each, $120 per case (—/V)

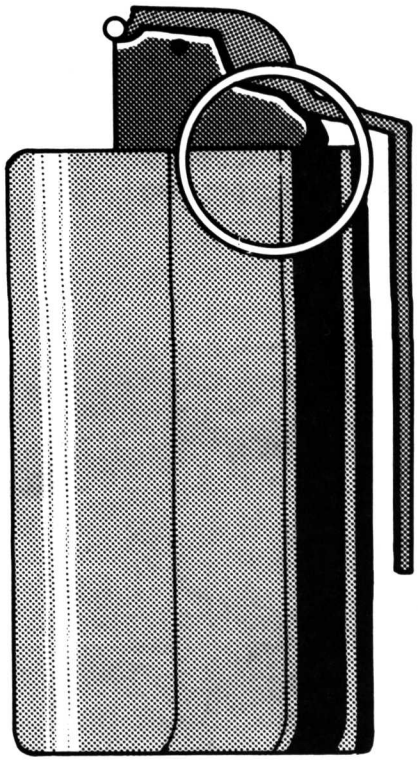

Fragmentation Grenade

Type	*Damage*	*Pen*
Frag	C:3, B:12	Nil

Fragmentation Grenade: The grenade, upon exploding, scatters metal fragments throughout its burst radius.

Wt: 0.5 kg, 20 kg per case of 20
Twilight: 2000 *Price:* $4 each, $100 per case (C/C)
Merc: 2000 *Price:* $10 each, $150 per case (—/V)

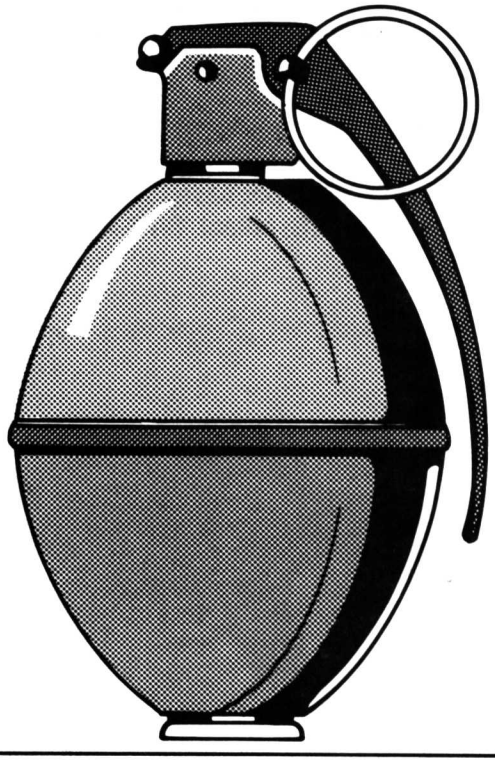

White Phosphorus (WP) Grenade

Type	*Damage*	*Pen*
White phosphorus	C:1, B:12	Nil

White Phosphorus (WP) Grenade: The grenade scatters incendiary fragments throughout its burst radius and burns with intense heat.

Wt: 1 kg, 20 kg per case of 16
Twilight: 2000 *Price:* $20 each, $280 per case (S/S)
Merc: 2000 *Price:* $12 each, $170 per case (—/C)

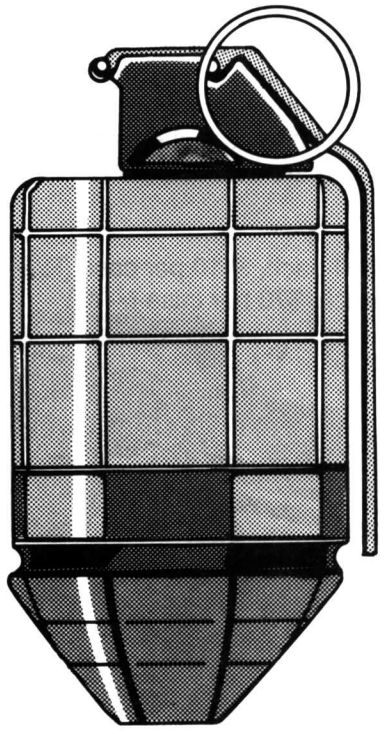

BTU Rifle Grenades

Type	Rng	IFR	Damage	Pen
APERS	20	400	C:3, B:12	Nil
HEAT	20	400	C:7, B:12	30C

BTU Rifle Grenades: These grenades are projected from the end of an assault rifle (by the impact energy of a bullet into the base of the grenade) and are carried to the target by inertia. The French, Israeli and American armies had adopted these grenades by 1995.

Wt: 0.4 kg, 14 kg per case of 20
Twilight: 2000 *Price:* $8 each, $80 per case (C/S)
Merc: 2000 *Price:* $5 each, $50 per case (—/C)

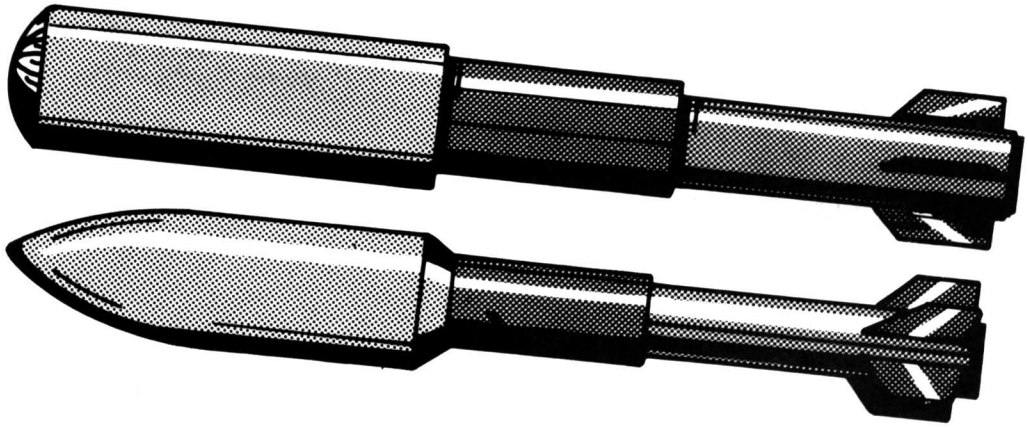

Chemical Rifle Grenade

Type	*Rng*	*IFR*	*Damage*	*Pen*
CHEM	15	200	C:1,B:12	Nil

Chemical Rifle Grenade: This is a grenade projected from the end of any battle rifle capable of firing 7.62mmN ammunition. An adaptor and a blank round are required. A chemical rifle grenade is not rocket assisted, and its range is greater than that of a thrown grenade but less than that of a RAW grenade. Its effects are the same as a chemical round for large-caliber guns. Two types are available: HC smoke and irritant gas.

Wt: 0.7 kg

Twilight: 2000 *Price:* $14 each, $110 per case (R/—)

Merc: 2000 *Price:* $9 each, $70 per case (—/C)

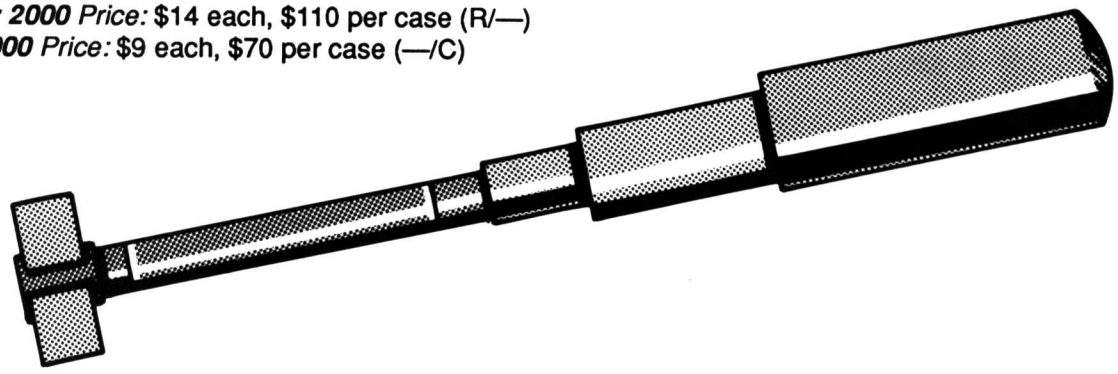

M31 HEAT Rifle Grenade

Type	*Rng*	*IFR*	*Damage*	*Pen*
M31	15	200	C:7, B:12	30C

M31 HEAT Rifle Grenade: This is an antitank grenade projected from the end of any battle rifle capable of firing 7.62mmN ammunition. An adaptor and a blank round are required. It is not rocket assisted, and its range is greater than that of a thrown grenade but less than that of a RAW grenade.

Wt: 0.7 kg, 12 kg per case of 10

Twilight: 2000 *Price:* $12 each, $100 per case (S/R)

Merc: 2000 *Price:* $8 each, $65 per case (—/C)

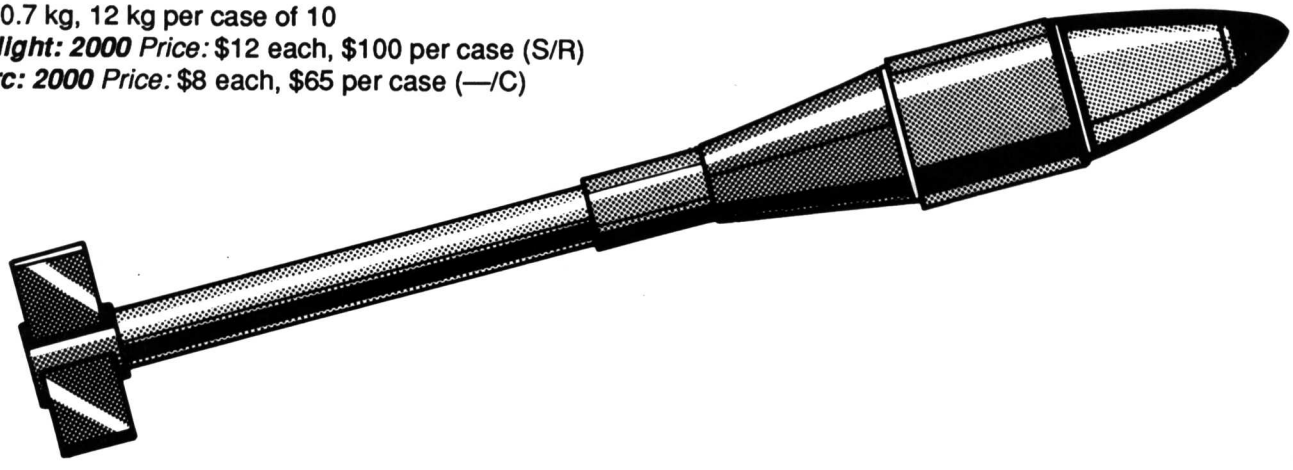

140mm RAW HE

Type	*Rng*	*IFR*	*Damage*	*Pen*
RAW HE	100	2000	C:10, B:28	1C

140mm RAW (Rifle Assault Weapon) HE: A rocket-propelled grenade with an HE warhead which can be fired from any assault rifle which fires 5.56mmN ammunition.

Wt: 3 kg

Twilight: 2000 *Price:* $50 each (S/R)

Merc: 2000 *Price:* $36 each (—/R)



140mm RAW HEAT

Type	*Rng*	*IFR*	*Damage*	*Pen*
RAW HEAT	100	2000	C:8, B:20	75C

140mm RAW (Rifle Assault Weapon) HEAT: This is a rocket-propelled grenade with a HEAT warhead. It can be fired from any assault rifle which fires 5.56mmN ammunition.

Wt: 3 kg

Twilight: 2000 *Price:* $100 each (S/R)

Merc: 2000 *Price:* $48 each (—/R)

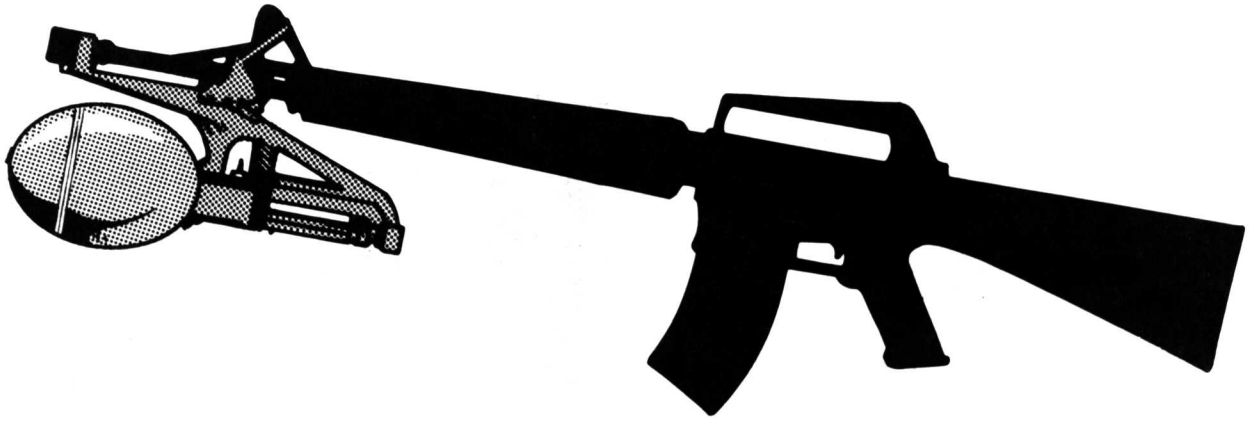

US Rifle Grenade

Type	*Rng*	*IFR*	*Damage*	*Pen*
APERS	20	400	C:3, B:12	Nil
HE	20	400	C:2, B:9	Nil
HEAT	20	400	C:7, B:12	30C

US Rifle Grenade: Copied from Israeli designs, these bullet trap grenades were adopted by the US Marines in the early 1990s (after the second Persian Gulf War) but were never type-standardized and never formally issued to the US Army. They require no adaptors or special ammunition, and can be fired from any 5.56mmN assault rifle.

Wt: 0.5 kg, 12 kg per case of 20

Twilight: 2000 *Price:* $9 each, $95 per case (S/S)

Merc: 2000 *Price:* $7 each, $75 per case (—/V)

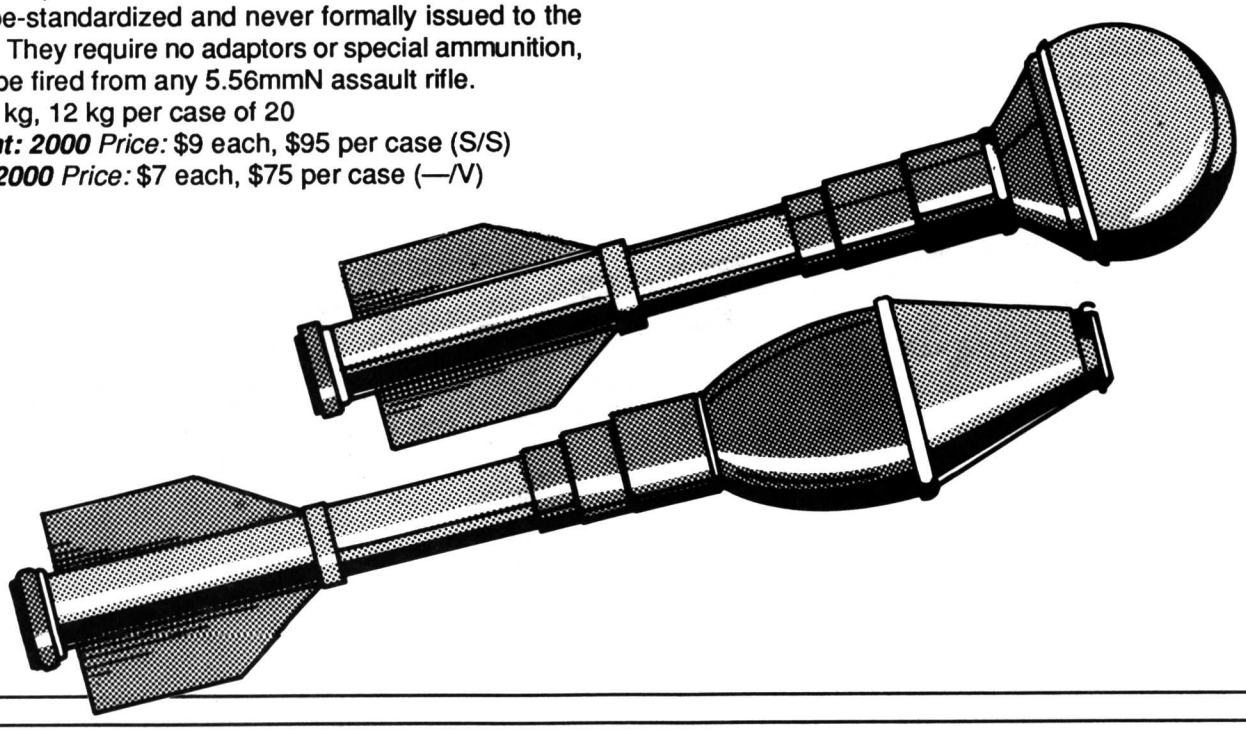

Artemis 30mm LAAG

Weapon	*ROF*	*Mag*	*Rng*	*Ammo*	*Damage*	*Pen*
Artemis	10	500B	875	API	16	4/2/0/–2
			875	HE	C:1, B:2	–6C

Artemis 30mm LAAG: This is a Greek-built, twin-barreled, air defense autocannon with a Swedish electronic fire control system and German target acquisition radar.

Crew: 4-6

Ammunition Wt: 90 kg per 100-round belt, 450 kg per 500-round belt

Gun Wt: 7 tons

Mag: 500B

Twilight: 2000 *Ammunition Price:* $750 per belt (S/S)

Merc: 2000 *Ammunition Price:* $135 per belt (—/S)

Twilight: 2000 *Gun Price:* $25,000 (R/—)

Merc: 2000 *Gun Price:* $15,000 (—/S)

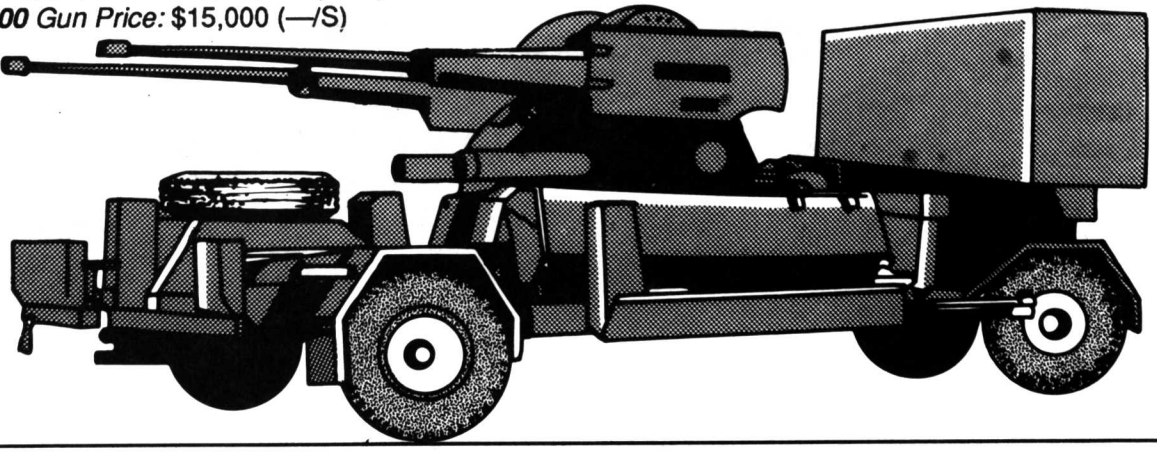

Bofors 40mm L60 ADA

Weapon	*ROF*	*Mag*	*Rng*	*Ammo*	*Damage*	*Pen*
40mm L60	5	20	1200	APT	16	5/1/–2
				HET	C:1, B:2	–6C

Bofors 40mm L60 ADA: The Swedish firm of Bofors has been making antiaircraft guns since 1928. One of the more recent versions, this weapon is in use by numerous armies throughout the world (and is produced under license by Spain, the UK and India).

The weapon comes in a bewildering variety of subvariants, most of which do not have target acquisition radar.

The gun has a hopper on top of the breech into which up to 20 rounds can be loaded at any one time. The weapon can be reloaded while firing by simply dropping ammunition clips into the top of the hopper. Some models are equipped with a shield to protect the gunner (armor factor 2).

Crew: 4-6

Ammunition Wt: 3.9 kg per four-round clip, 19.5 kg total when fully loaded

Gun Wt: 2.4 tons

Mag: 20

***Twilight: 2000** Ammunition Price:* $32 per four-round clip (S/R)

***Merc: 2000** Ammunition Price:* $16 per four-round clip (—/S)

***Twilight: 2000** Gun Price:* $30,000 (R/—)

***Merc: 2000** Gun Price:* $45,000 (—/S)

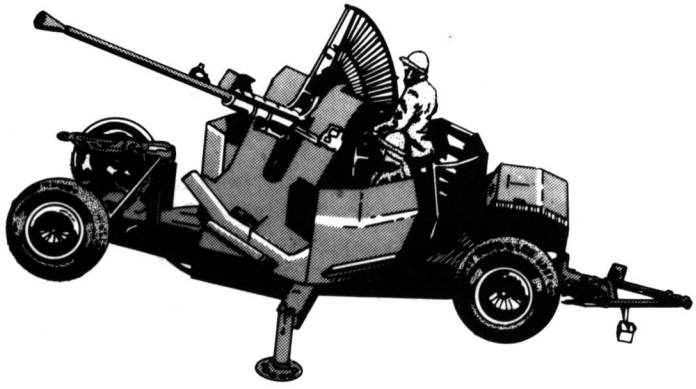

Bofors 40mm L70 ADA

Weapon	*ROF*	*Mag*	*Rng*	*Ammo*	*Damage*	*Pen*
Bofors L70	5	24	1200	APT	16	5/1/–2
				HET	C:1, B:2	–6C

Bofors 40mm L70 ADA: This is an updated version of the classic Bofors 40mm antiaircraft gun, equipped with sophisticated electronics, power traverse (from an integral generator) and target acquisition radar (although, like the L60 model, it comes in a large number of subvariants). The gun has a hopper on top of the breech into which up to 24 rounds can be loaded at any one time. The weapon can be reloaded while firing by simply dropping ammunition clips into the top of the hopper. Some models are equipped with a shield to protect the gunner (armor factor 2).

Crew: 4-6

Ammunition Wt: 3.9 kg per four-round clip, 23.4 kg total when fully loaded

Gun Wt: 5.7 tons

Mag: 24

***Twilight: 2000** Ammunition Price:* $32 per four-round clip (S/R)

***Merc: 2000** Ammunition Price:* $16 per four-round clip (—/S)

***Twilight: 2000** Gun Price:* $32,000 (R/—)

***Merc: 2000** Gun Price:* $46,000 (—/S)

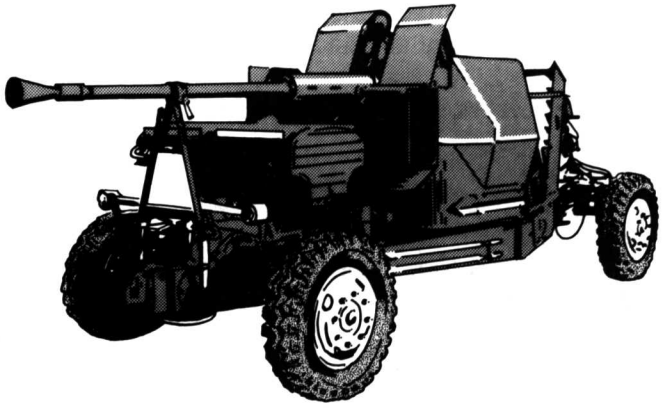

Breda 40mm L70 ADA

Weapon	ROF	Mag	Rng	Ammo	Damage	Pen
Breda L70	5	144	1200	APT	16	5/1/–2
				HET	C:1, B:2	–6C

Breda 40mm L70 ADA: This is a license-built version of the Bofors 40mm L70 antiaircraft gun. The main difference between this model and the standard L70 is the larger hopper capacity, which reduces the stress on the weapon's loader. The weapon has no integral target acquisition radar, but this is often handled by a separate unit with the battery headquarters, linking several guns into a single TA radar set.

Crew: 3
Ammunition Wt: 3.9 kg per four-round clip
Gun Wt: 5.3 tons
Mag: 144
***Twilight: 2000** Ammunition Price:* $32 per four-round clip (S/R)
***Merc: 2000** Ammunition Price:* $16 per four-round clip (—/S)
***Twilight: 2000** Gun Price:* $32,000 (R/—)
***Merc: 2000** Gun Price:* $46,000 (—/S)

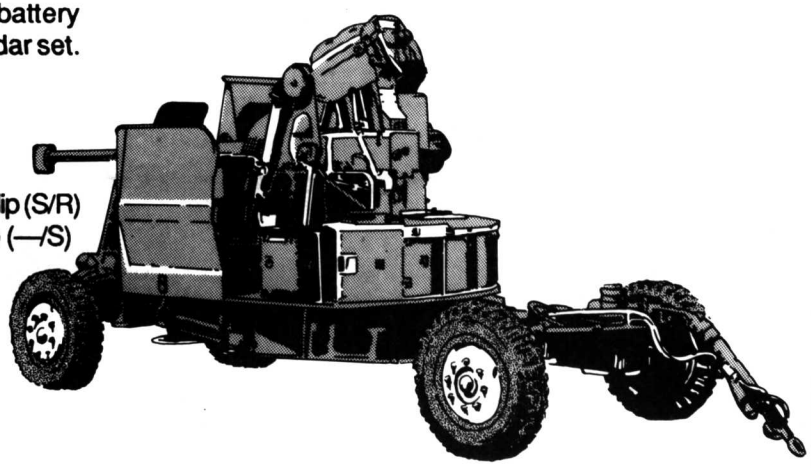

Breda Sentinel Twin 30mm ADA

Weapon	ROF	Mag	Rng	Ammo	Damage	Pen
Sentinel	10	500B	750	API	16	4/2/0/–2
			750	HE	C:1, B:2	–6C

Breda Sentinel Twin 30mm ADA: The Breda Sentinel uses twin 30mm autocannons mounted on a four-wheeled towed carriage, with target acquisition radar on a separate trailer-mounted unit. The weapon has a gun shield (armor factor 2) which protects the crew from fragments during counterbattery fire or air attack.

Crew: 4
Ammunition Wt: 90 kg per 100-round belt
Gun Wt: 5 tons
Mag: 500B
***Twilight: 2000** Ammunition Price:* $750 per belt (S/S)
***Merc: 2000** Ammunition Price:* $135 per belt (—/S)
***Twilight: 2000** Gun Price:* $45,000 (R/—)
***Merc: 2000** Gun Price:* $25,000 (—/S)

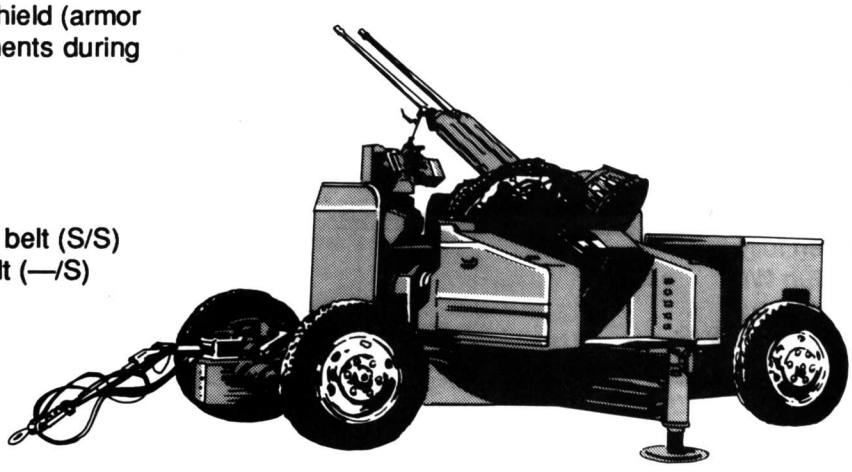

Breda Twin 40mm L70 ADA

Weapon	*ROF*	*Mag*	*Rng*	*Ammo*	*Damage*	*Pen*
40mm L70	5	480D	200	API	14	4/2/0/–2

Breda Twin 40mm L70 ADA: This is a license-built, twin-barrel version of the Bofors 40mm L70 antiaircraft gun, with the action sheltered inside a fiberglass cupola. It is otherwise identical to the Breda 40mm L70 ADA mentioned previously. The weapon has no integral target acquisition radar, but this is often handled by a separate unit with the battery headquarters, linking several guns into a single TA radar set.

Crew: 4
Ammunition Wt: .98 kg per round, 468 kg drum
Gun Wt: 10 tons
Mag: 480D
***Twilight: 2000** Ammunition Price:* $32 per four-round clip (S/R)
***Merc: 2000** Ammunition Price:* $16 per four-round clip (—/S)
***Twilight: 2000** Gun Price:* $45,000 (R/—)
***Merc: 2000** Gun Price:* $54,000 (—/S)

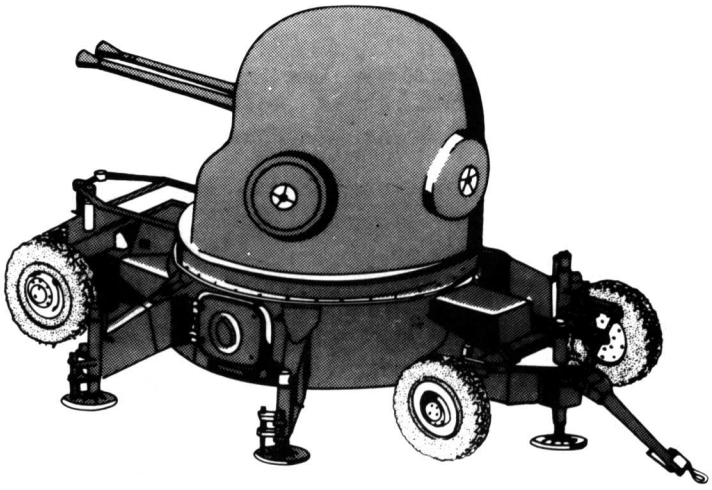

D-48 85mm AT Gun

Type	*Round*	*Rng*	*Damage*	*Pen*
D-48	APHE	600	C:5, B:10	50C
	HVAP	400	22	25/20/15

D-48 85mm AT Gun: Introduced in 1955, the D-48 85mm antitank gun was replaced by the T-12 100mm gun in the mid-1960s.

Crew: 6
Round Wt: 10 kg (all types)
Weapon Wt: 2.4 tons
***Twilight: 2000** Round Price:* $900 (—/S)
***Merc: 2000** Round Price:* $450 (—/S)
***Twilight: 2000** Weapon Price:* $36,000 (—/S)
***Merc: 2000** Weapon Price:* $24,000 (—/S)

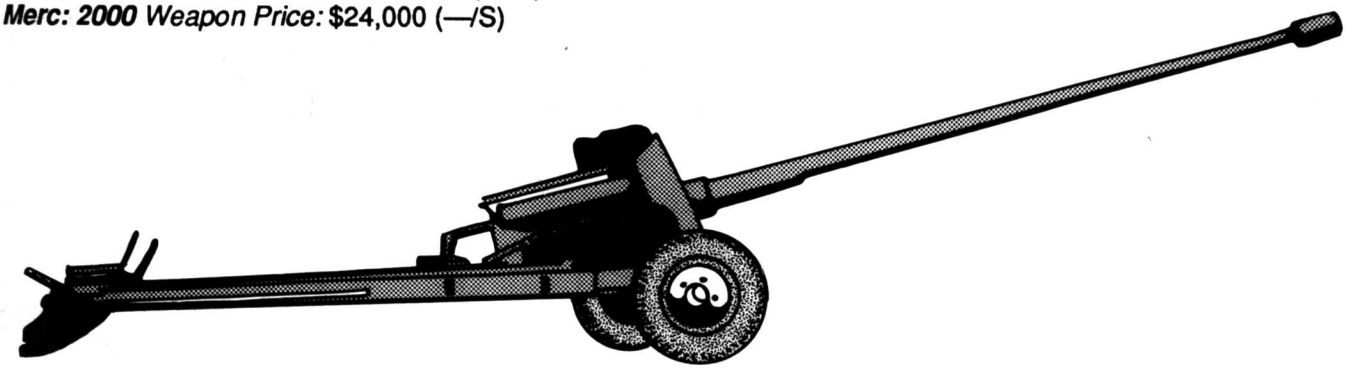

D-74 (M-1955) 122mm Gun

D-74 (M-1955) 122mm Gun: The D-74 is an older and heavier ancestor of the D-30 122mm gun, and it remains the standard heavy gun/howitzer in the Soviet arsenal. This weapon is produced by several Chinese factories, where it is known as the Type 60 122mm gun.

Crew: 10
Weapon Wt: 5.6 tons
Round Wt: 25 kg
***Twilight** Weapon Price:* $75,000 (—/R); ***Merc** Weapon Price:* $50,000 (—/R)

HE
***Twilight** Price:* $350 per case (S/C); ***Merc** Price:* $135 per case (—/S)

HEAT
***Twilight** Price:* $500 per case (R/S); ***Merc** Price:* $140 per case (—/S)

WP, CHEM
***Twilight** Price:* $700 per case (R/S); ***Merc** Price:* $160 per case (—/R)

ICM
***Twilight** Price:* $2000 per case (R/R); ***Merc** Price:* $200 per case (—/R)

ILLUM
***Twilight** Price:* $350 per case (R/R); ***Merc** Price:* $150 per case (—/S)

Powder Charge
Charge Wt: 10 kg
***Twilight** Price:* $40 per case (S/V); ***Merc** Price:* $30 per case (—/S)

Type	*Round*	*Rng*	*Damage*	*Pen*
122mm	HE	300	C:16, B:28	1C
IFR: 15 km	HEAT	300	C:10, B:20	100C
Rld: 1	WP	300	C:3, B:36	Nil
	CHEM	300	C:3, B:12	Nil
	ICM	—	B:36	Grenade
	ILLUM	—	B:1500	Nil

ICM Attack Data

Round	*Close*	*Adj.*	*Conc*	*Burst*	*Pen*
122 ICM	1-3	2	3	12	Nil

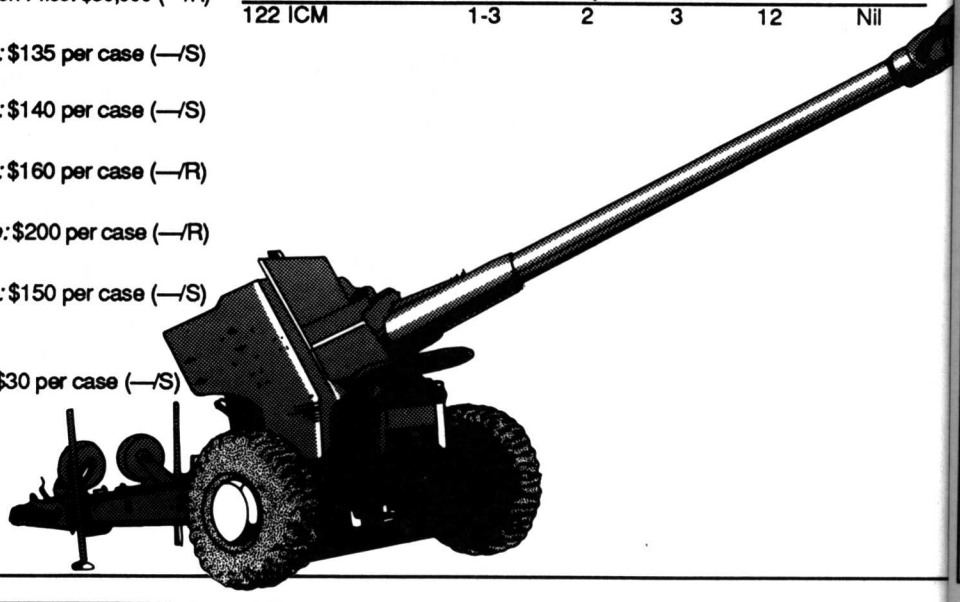

Giat 53T4 Twin 20mm ADA

Giat 53T4 Twin 20mm ADA: This is a French-built, light antiaircraft gun system. It is usually fired from a ground mount but is sometimes found mounted on a truck bed. The weapon has no target acquisition radar.

Crew: 2
Ammunition Wt: 50 kg per 100-round belt
Gun Wt: 2 tons
Mag: 300B
***Twilight: 2000** Ammunition Price:* $450 per belt (S/R)
***Merc: 2000** Ammunition Price:* $500 per belt (—/C)
***Twilight: 2000** Gun Price:* $9000 (S/—)
***Merc: 2000** Gun Price:* $7500 (—/C)

Weapon	*ROF*	*Mag*	*Rng*	*Ammo*	*Damage*	*Pen*
53T4	20	300B	450	API	10	3/–2/–5
			450	HE	C:1, B:2	–8C

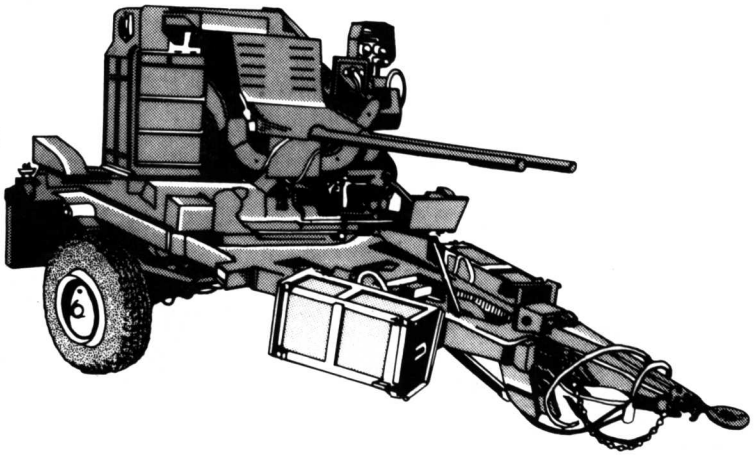

Giat 76T2 Twin 20mm ADA

Weapon	ROF	Mag	Rng	Ammo	Damage	Pen
76T2	20	540B	450	API	10	3/–2/–5
			450	HE	C:1, B:2	–8C

Giat 76T2 Twin 20mm ADA: This is the mount and traverse gear of the German *Rheinmetal* 20mm AA gun with the weapons replaced by French 20mm autocannons. It has a gun shield to protect the crew from fragments (armor factor 2).

Crew: 3
Ammunition Wt: 50 kg per 100-round belt
Gun Wt: 2.2 tons
Mag: 540B
Twilight: 2000 *Ammunition Price:* $450 per belt (S/R)
Merc: 2000 *Ammunition Price:* $500 per belt (—/C)
Twilight: 2000 *Gun Price:* $9000 (S/—)
Merc: 2000 *Gun Price:* $7500 (—/C)

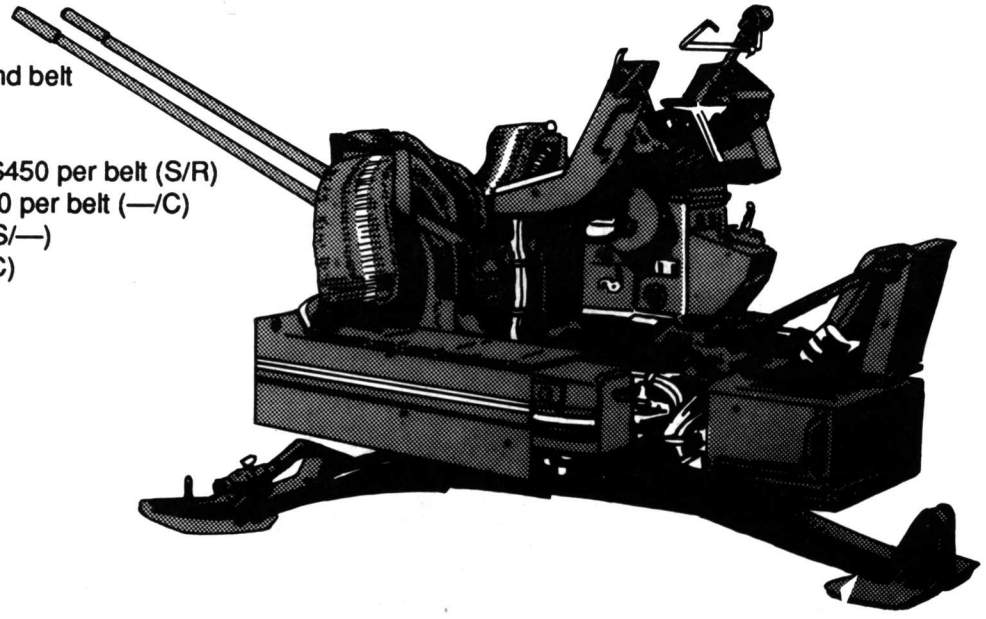

KS-12 (M-1939) 85mm AA Gun

Type	Round	Rng	Damage	Pen
KS-12	APHE	600	C:5, B:10	50C
	HVAP	400	22	25/20/15
	HE	700	C:5, B:24	4C

KS-12 (M-1939) 85mm AA Gun: The KS-12 is capable of firing the same rounds used by the D-44 AT gun, D-48 AT gun and ASU-85 self-propelled AT gun. A special HE round with a proximity fuse is used for antiaircraft fire. This weapon has been replaced by the larger 100mm AT guns in Russian service, but it remains in use by other nations, including China (where it is known as the Type 56 85mm AT gun). The weapon has a gun shield (armor factor 2) to protect the crew against fragments.

Crew: 7
Round Wt: 10 kg
Weapon Wt: 4.3 tons
Twilight: 2000 *Round Price:* $900 (—/S)
Merc: 2000 *Round Price:* $450 (—/S)
Twilight: 2000 *Weapon Price:* $20,000 (—/R)
Merc: 2000 *Weapon Price:* $16,000 (—/R)

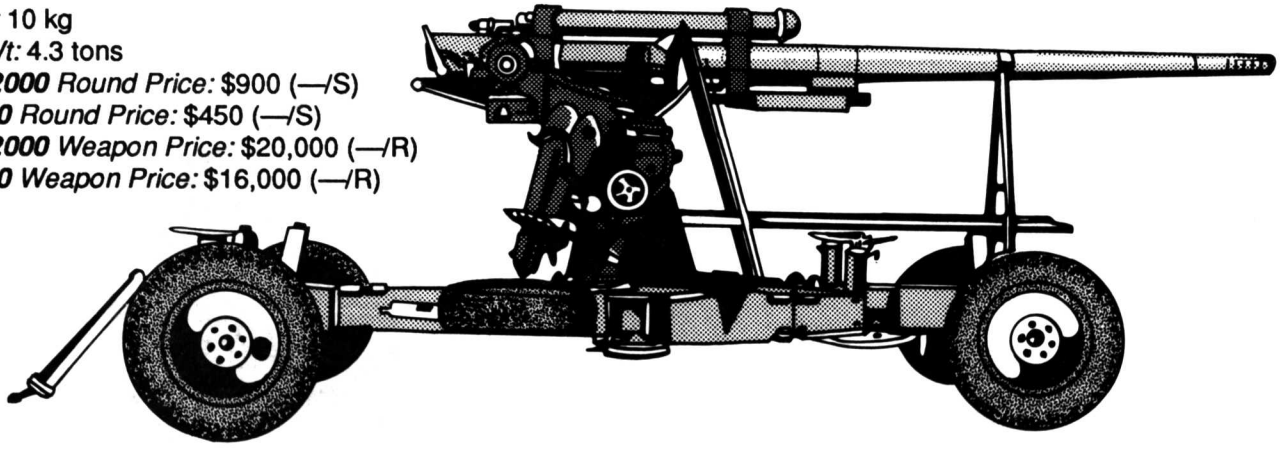

KS-19 100mm AA Gun

Type	*Round*	*Rng*	*Damage*	*Pen*
KS-19	HE	1500	C:6, B:20	4C
	APHE	800	24	35/25/15

KS-19 100mm AA Gun: The KS-19 replaced earlier 85mm AA guns in the late 1940s and was itself later replaced by more modern types. It remains in service with a number of smaller armed forces. The warlord of Beijing still manufactures the KS-19, calling it the Type 59 AA gun. The weapon has no integral target acquisition radar, but may be linked to TA sets at battery headquarters.

Crew: 9
Round Wt: 16 kg
Weapon Wt: 11 tons
***Twilight: 2000** Round Price (All Types):* $800 (—/R)
***Merc: 2000** Round Price (All Types):* $700 (—/R)
***Twilight: 2000** Gun Price:* $65,000 (—/R)
***Merc: 2000** Gun Price:* $50,000 (—/R)

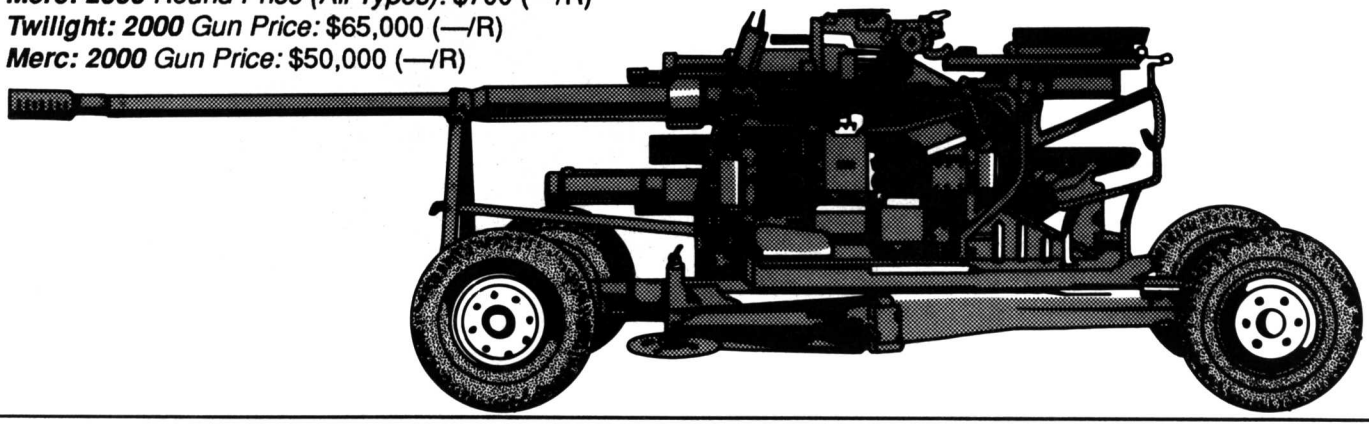

KS-30 130mm AA Gun

Type	*Round*	*Rng*	*Damage*	*Pen*
KS-30	HE	2750	C:7, B:24	4C

KS-30 130mm AA Gun: An obsolete Russian heavy antiaircraft gun, the KS-30 was largely superseded in front-line units by surface-to-air-missiles. It remains in reserve with the Russian military and can be found in active service in many nations throughout the world.

Crew: 11
Round Wt: 23 kg
Weapon Wt: 25 tons
***Twilight: 2000** Round Price:* $900 (—/R)
***Merc: 2000** Round Price:* $800 (—/R)
***Twilight: 2000** Gun Price:* $80,000 (—/R)
***Merc: 2000** Gun Price:* $60,000 (—/R)

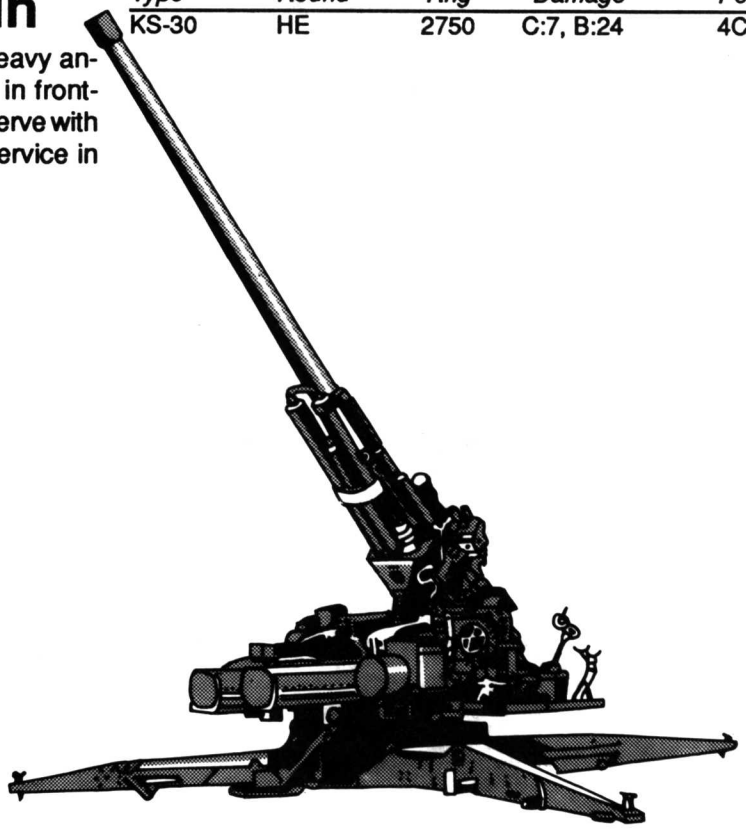

M-53 Twin 30mm ADA

Weapon	*ROF*	*Mag*	*Rng*	*Ammo*	*Damage*	*Pen*
M-53	10	500B	750	API	16	4/2/0/–2
			750	HE	C:1, B:2	–6C

M-53 Twin 30mm ADA: The M-53 is a Czech-built antiaircraft gun incorporating two 30mm autocannons on a four-wheeled carriage. The weapon is still in service with the Czech and Slovak militaries, as well as those of Cuba, Romania, Vietnam and the various ex-Yugoslavian states.

Crew: 4
Ammunition Wt: 9 kg per 10-round clip
Gun Wt: 2.1 tons
Mag: 500B
Twilight: 2000 *Ammunition Price:* $75 per clip (S/S)
Merc: 2000 *Ammunition Price:* $15 per clip (—/S)
Twilight: 2000 *Gun Price:* $15,000 (—/R)
Merc: 2000 *Gun Price:* $11,000 (—/S)

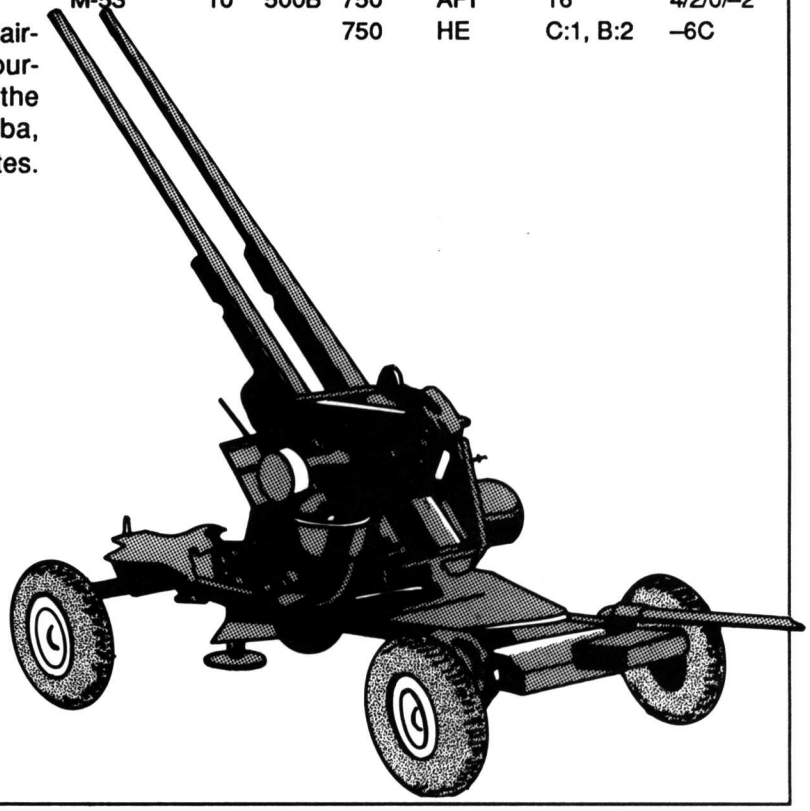

M198 155mm Gun/Howitzer

Type	*Round*	*Rng*	*Damage*	*Pen*
155mm	HE	350	C:30, B:36	3C
IFR: 24 km	HEAT	350	C:20, B:28	110C
Rld: 2	WP	350	C:3, B:44	Nil
	CHEM	350	C:3, B:28	Nil
	ICM-DP	—	B:60	Grenade
	ILLUM	—	B:2000	Nil
	FASCAM	—	B:124	Mine

ICM Attack Data

Round	*Close*	*Adj.*	*Conc*	*Burst*	*Pen*
155 ICMDP	1-4	3	3	12	4C

M198 155mm Gun/Howitzer: The M198 was adopted in the early 1970s as a replacement for the M114 155mm gun/howitzer.

Crew: 11
Round Wt: 50 kg each
Weapon Wt: 7.5 tons
Twilight *Weapon Price:* $600,000 (C/—); ***Merc*** *Weapon Price:* $450,000 (—/C)

HE
Twilight *Price:* $500 per round (C/S); ***Merc*** *Price:* $140 per round (—/C)

HEAT
Twilight *Price:* $750 per round (C/S); ***Merc*** *Price:* $175 per round (—/C)

ICM-DP
Twilight *Price:* $3000 per round (R/R); ***Merc*** *Price:* $280 per round (—/S)

WP
Twilight *Price:* $1500 per round (S/R); ***Merc*** *Price:* $190 per round (—/R)

CHEM
Twilight *Price:* $500 per round e(S/R); ***Merc*** *Price:* $190 per round (—/R)

ILLUM
Twilight *Price:* $480 per round (S/R); ***Merc*** *Price:* $170 per round (—/S)

FASCAM
Twilight *Price:* $5000 per round (R/R); ***Merc*** *Price:* $300 per round (—/R)

Powder Charge
Charge Wt: 25 kg
Twilight *Price:* $60 (V/S); ***Merc*** *Price:* $55 (—/C)

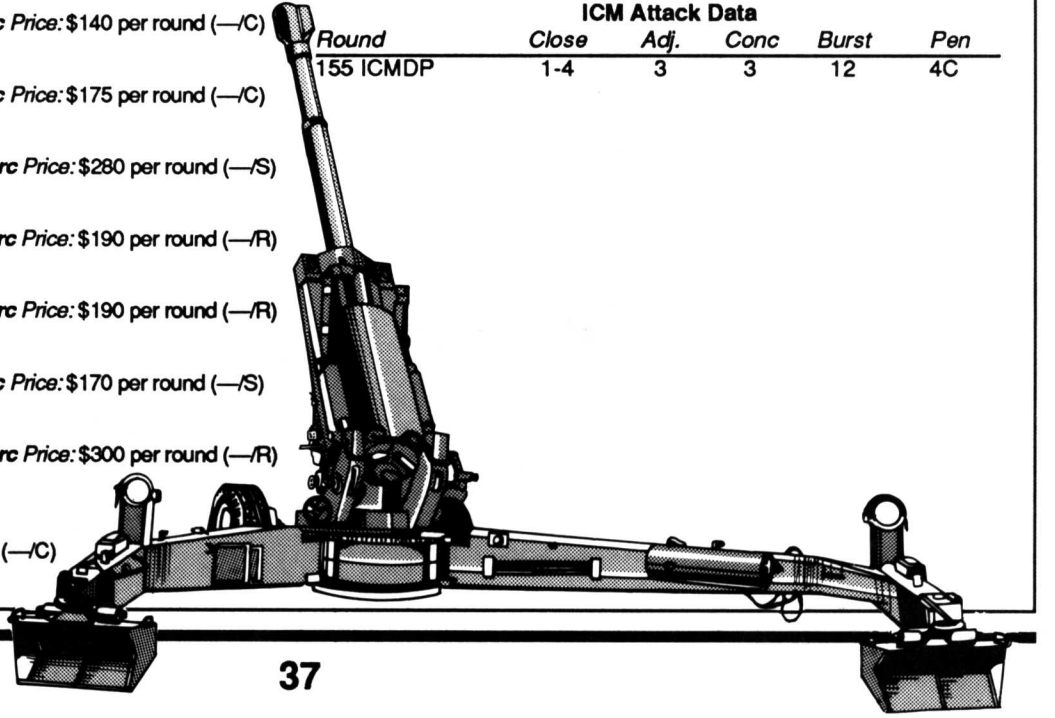

M-1944 100mm AT Gun

M-1944 100mm AT Gun: This Russian-built, towed antitank gun uses the same rounds as the 100mm gun in the T-54/55 tank.

Crew: 6
Weapon Wt: 3.4 tons
Twilight: 2000 *Weapon Price:* $65,000 (—/R)
Merc: 2000 *Weapon Price:* $45,000 (—/R)

APHE
Round Wt: 21 kg
Twilight: 2000 *Round Price:* $650 (—/S)
Merc: 2000 *Round Price:* $455 (—/R)

HEAT
Round Wt: 22 kg
Twilight: 2000 *Round Price:* $650 (—/S)
Merc: 2000 *Round Price:* $455 (—/R)

HVAPDS-T
Round Wt: 25 kg
Twilight: 2000 *Round Price:* $750 (—/R)
Merc: 2000 *Round Price:* $525 (—/R)

WP
Round Wt: 18 kg
Twilight: 2000 *Round Price:* $700 (—/S)
Merc: 2000 *Round Price:* $490 (—/R)

Type	*Round*	*Rng*	*Damage*	*Pen*
M-1944	HVAPDS-T	350	26	70/60/50/30
	APHE	300	C:6, B:12	70C
	HEAT	250	C:4, B:10	60C
	WP	250	C:3, B:20	Nil

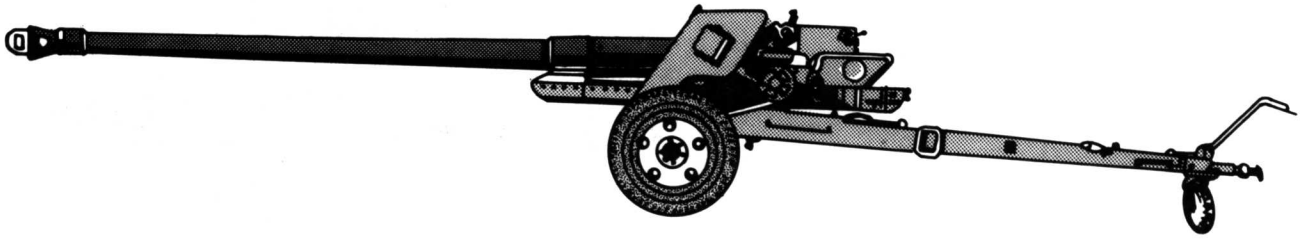

M-1946 130mm Field Gun

M-1946 130mm Field Gun: The M-1946 is the primary Russian field gun, although it is gradually being replaced by the more modern 152mm howitzers. The weapon is used by various Chinese warlords, Vietnam and other nations worldwide.

Crew: 9
Ammunition Wt (All Types): 33 kg
Twilight: 2000 *Ammunition Price (All Types):* $450 (—/R)
Merc: 2000 *Ammunition Price (All Types):* $350 (—/R)
Twilight: 2000 *Weapon Price:* $45,000 (—/R)
Merc: 2000 *Weapon Price:* $32,000 (—/R)

Type	*Round*	*Rng*	*Damage*	*Pen*
M-1946	HE	900	C:6, B:32	4C
IFR: 27 km	APHE	800	28	55/45/35/20
Rld: 2	WP	1000	C:6, B:32	Nil

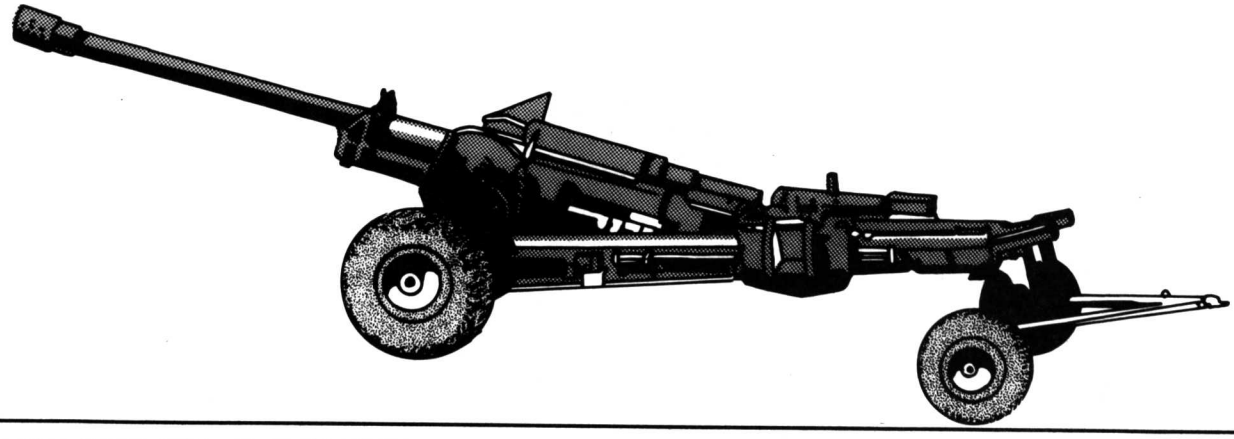

M-1976 152mm Gun

M-1976 152mm Gun: The M-1976 entered Soviet service in the mid-1970s and is still in service in Russian Republic artillery divisions and army-level artillery regiments and brigades.

Crew: 8
Twilight: 2000 *Weapon Price:* $65,000 (—/R)
Merc: 2000 *Weapon Price:* $45,000 (—/R)

HE
Twilight: 2000 *Price:* $500 (S/C); ***Merc: 2000*** *Price:* $150 (—/S)

HEAT
Twilight: 2000 *Price:* $750 (R/S); ***Merc: 2000*** *Price:* $180 (—/S)

ICM
Twilight: 2000 *Price:* $3000 (R/R); ***Merc: 2000*** *Price:* $300 (—/R)

WP
Twilight: 2000 *Price:* $1000 (R/S); ***Merc: 2000*** *Price:* $200 (—/R)

CHEM
Twilight: 2000 *Price:* $500 (R/S); ***Merc: 2000*** *Price:* $200 (—/R)

ILLUM
Twilight: 2000 *Price:* $500 (R/R); ***Merc: 2000*** *Price:* $190 (—/R)

Powder Charge
Charge Wt: 25 kg
Twilight: 2000 *Price:* $60 (S/C); ***Merc: 2000*** *Price:* $50 (—/S)

Type	*Round*	*Rng*	*Damage*	*Pen*
152mm	HE	300	C:24, B:36	3C
IFR: 19 km	APHE	350	C:8, B:12	80C
Rld: 2	WP	300	C:3, B:44	Nil
	CHEM	300	C:3, B:28	Nil
	ICM	—	B:60	Grenade
	ILLUM	—	B:2000	Nil

ICM Attack Data

Round	*Close*	*Adj.*	*Conc*	*Burst*	*Pen*
152 ICM	1-4	3	3	12	Nil

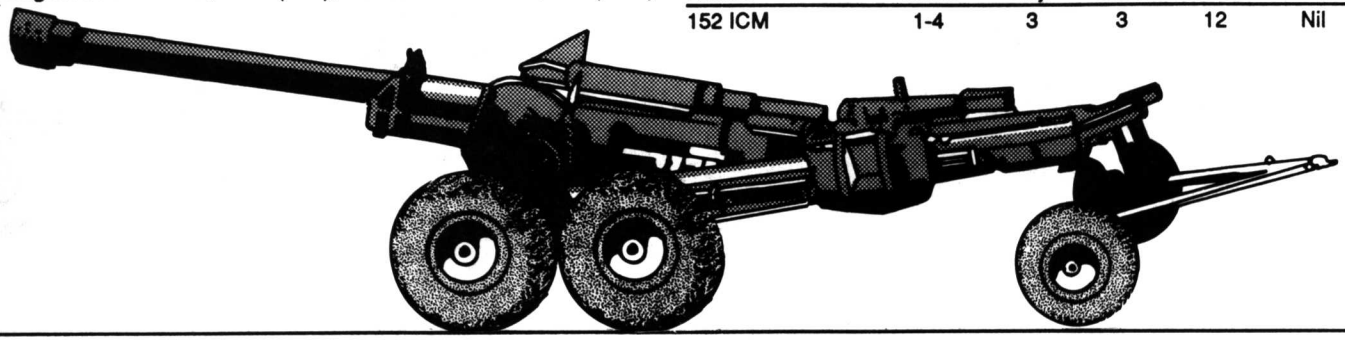

M-1944 85mm AA Gun

M-1944 85mm AA Gun: This weapon is an improved version of the KS-12 85mm AA gun and is similar in overall appearance.

Crew: 7
Round Wt: 10 kg
Weapon Wt: 5 tons
Twilight: 2000 *Round Price:* $900 (—/S)
Merc: 2000 *Round Price:* $450 (—/S)
Twilight: 2000 *Weapon Price:* $21,000 (—/R)
Merc: 2000 *Weapon Price:* $16,000 (—/R)

Type	*Round*	*Rng*	*Damage*	*Pen*
M-1944	APHE	600	C:5, B:10	50C
	HVAP	400	22	25/20/15
	HE	800	C:5, B:24	4C

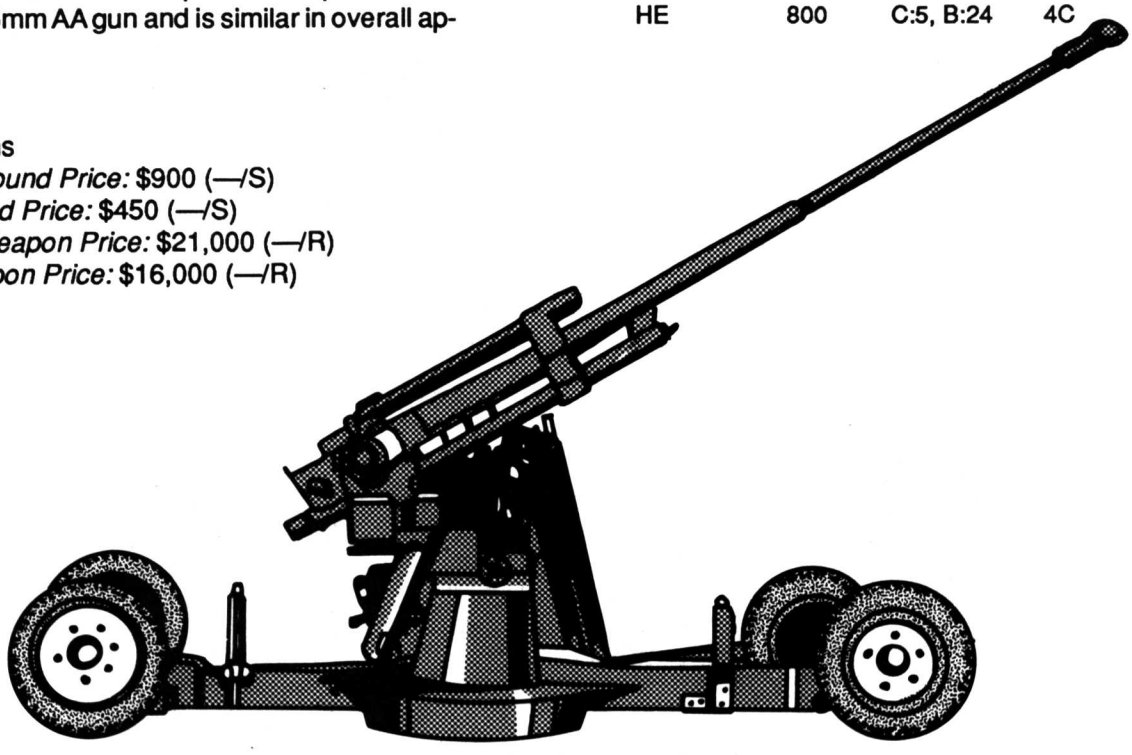

M-1939 37mm AA

Weapon	ROF	Mag	Rng	Ammo	Damage	Pen
M-1939	5	10D	1200	APT	16	5/1/–2
				HET	C:1, B:2	–6C

M-1939 37mm AA Gun: The M-1939 is an obsolete Russian antiaircraft gun developed prior to the outbreak of WWII. It is no longer in service with any of the old Warsaw Pact nations, but it is still manufactured by Poland (for export) and by several Chinese warlords (as the Type 55). The M-1939 remains in use by many armies in the Middle East and Asia.

The weapon has no provision for radar and is a clear-weather system only. The weapon is loaded by dropping five-round clips of ammunition into the hopper.

Crew: 4

Ammunition Wt (All Types): 4 kg per five-round clip

Gun Wt: 2.4 tons

Mag: 10D

***Twilight: 2000** Ammunition Price (All Types):* $30 per five-round clip (S/R)

***Merc: 2000** Ammunition Price (All Types):* $14 per five-round clip (—/S)

***Twilight: 2000** Gun Price:* $24,000 (—/R)

***Merc: 2000** Gun Price:* $32,000 (—/S)

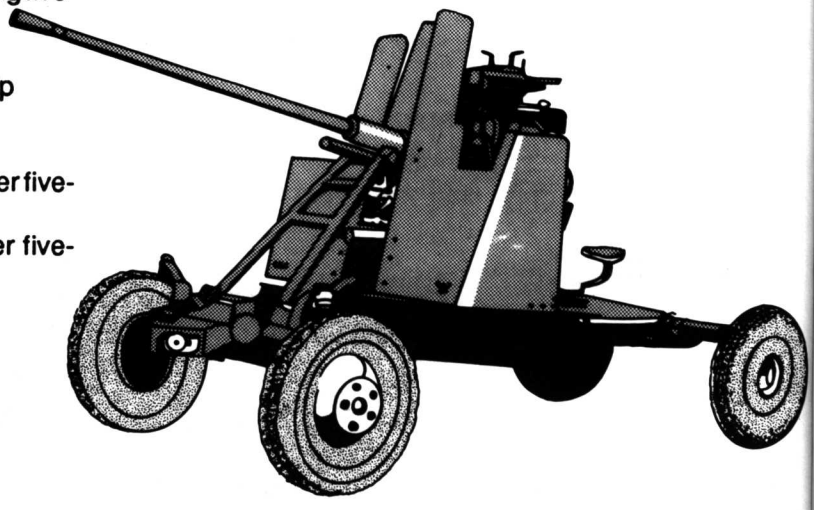

M-53/1 30mm ADA

Weapon	ROF	Mag	Rng	Ammo	Damage	Pen
M-53/1	5	500B	750	API	16	4/2/0/–2
			750	HE	C:1, B:2	–6C

M-53/1 30mm ADA: The M-53/1 is a single-barreled version of the Czech M-53 twin 30mm ADA.

Crew: 4

Ammunition Wt: 9 kg per 10-round belt

Gun Wt: 2.1 tons

Mag: 500B

***Twilight: 2000** Ammunition Price:* $75 per belt (S/S)

***Merc: 2000** Ammunition Price:* $15 per belt (—/S)

***Twilight: 2000** Gun Price:* $13,000 (—/R)

***Merc: 2000** Gun Price:* $9000 (—/S)

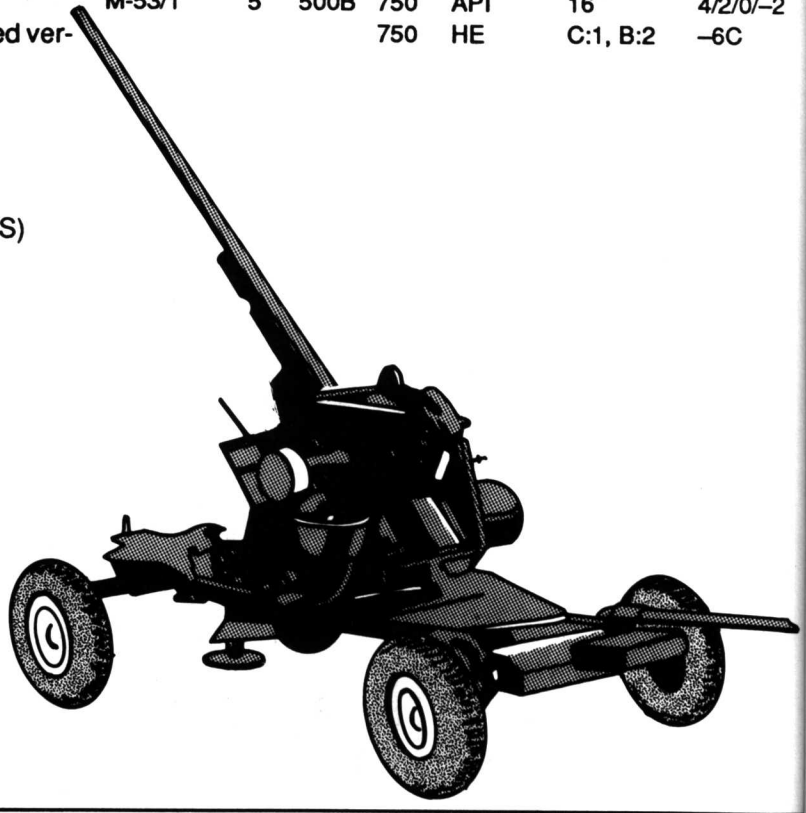

M55 20/3 20mm Triple AA

Weapon	*ROF*	*Mag*	*Rng*	*Ammo*	*Damage*	*Pen*
M55 20/3	30	180D	450	API	10	3/–2/–5
			450	HE	C:1, B:2	–8C

M55 20/3 20mm Triple AA: The M55 20/3 is a triple-barreled 20mm antiaircraft autocannon manufactured by several of the Yugoslavian splinter states. It has no provision for target acquisition radar and is a clear weather system.

Crew: 6
Ammunition Wt: 50 kg per 60-round drum
Gun Wt: 1.1 tons
Mag: 180D
Twilight: 2000 *Ammunition Price:* $400 per drum (S/R)
Merc: 2000 *Ammunition Price:* $450 per drum (—/C)
Twilight: 2000 *Gun Price:* $10,000 (—/R)
Merc: 2000 *Gun Price:* $8500 (—/S)

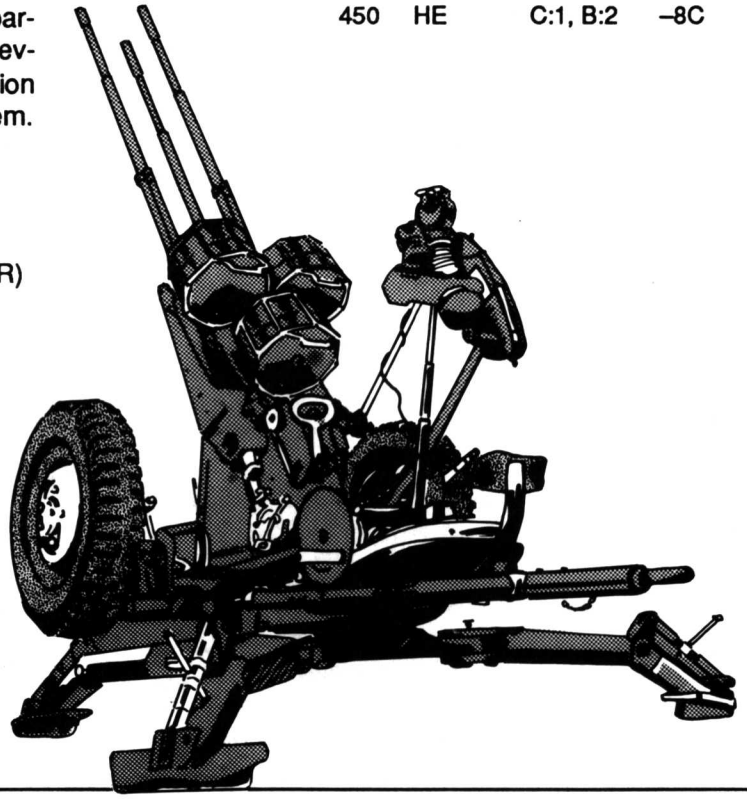

M55 20/2 20mm Twin AA

Weapon	*ROF*	*Mag*	*Rng*	*Ammo*	*Damage*	*Pen*
M55 20/2	20	120D	450	API	10	3/–2/–5
			450	HE	C:1, B:2	–8C

M55 20/2 20mm AA: The M55 20/2 is a twin-barreled 20mm antiaircraft autocannon manufactured by several of the Yugoslavian splinter states. It has no provision for target acquisition radar, and is a clear weather system.

Crew: 4
Ammunition Wt: 50 kg per 60-round drum
Gun Wt: 900 kg
Mag: 120D
Twilight: 2000 *Ammunition Price:* $400 per drum (S/R)
Merc: 2000 *Ammunition Price:* $450 per drum (—/C)
Twilight: 2000 *Gun Price:* $9000 (—/R)
Merc: 2000 *Gun Price:* $7500 (—/S)

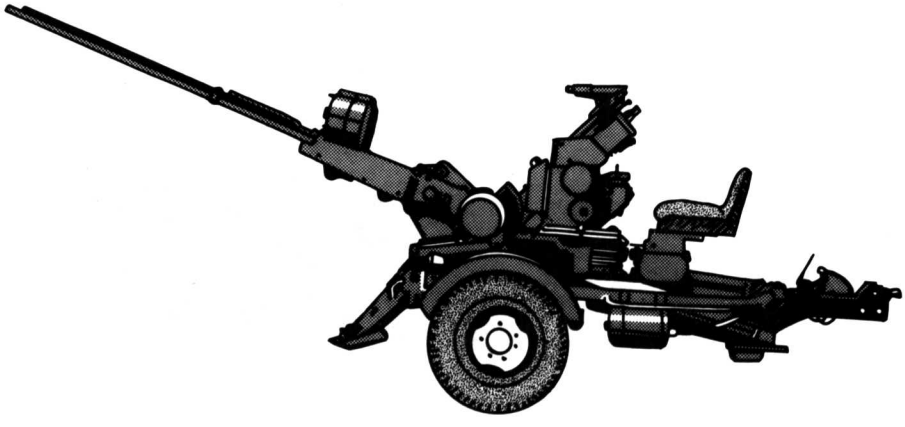



M55 Quad .50 (12.7mm) ADA

M55 Quad .50 (12.7mm) ADA: This is an obsolete antiaircraft gun incorporating four American .50-caliber (12.7mm) air-cooled machineguns on a powered 360° mount. This particular combination was used by American forces in WWII in both towed and self-propelled versions. It is no longer in service in the US Army, but is used by more than a dozen armies throughout the world and is still under production (under a license arrangement) in Brazil. The weapon is not normally equipped with target acquisition radar.

Crew: 4
Gun Wt: 1.4 tons
Mag: 840B
***Twilight: 2000** Gun Price:* $15,000 (S/R)
***Merc: 2000** Gun Price:* $20,000 (—/S)

BMG
Wt: 15 kg per case of one belt, 13 kg per 105-round belt
***Twilight: 2000** Price:* $35 per case (C/S)
***Merc: 2000** Price:* $75 per case (S/V)

SLAP
Wt: 15 kg per case of one belt, 13 kg per 105-round belt
***Twilight: 2000** Price:* $60 per case (S/R)
***Merc: 2000** Price:* $85 per case (S/V)

Weapon	*ROF*	*Mag*	*Rng*	*Ammo*	*Damage*	*Pen*
M55	20	840B	150	BMG	8	2-2-3
				SLAP	8	1-1-2

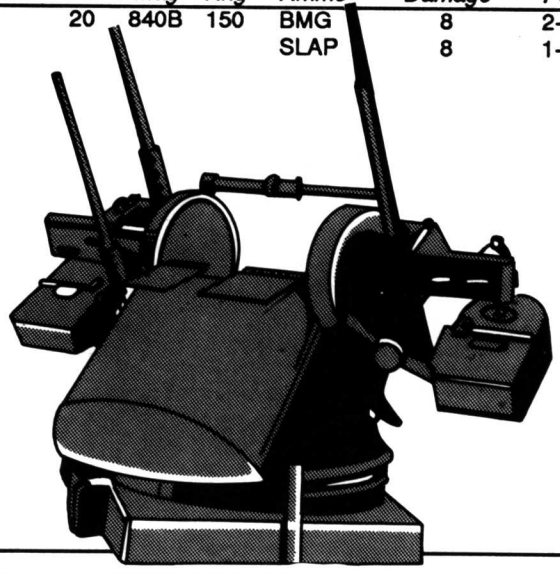

The Browning .50-caliber machinegun (in its current incarnation as the M2HB machinegun in the US Army) began life in WWI as an antitank gun (which indicates something about WWI-era tank armor), then became an antiaircraft weapon. Many soldiers strongly though incorrectly believe that it is against the Geneva Convention to fire this weapon against personnel due to its armor-piercing origins.

M75 20/1

M75 20/1: The M75 20/1 is a 20mm antiaircraft autocannon manufactured by several of the Yugoslavian splinter states. It has no provision for target acquisition radar and is a clear weather system.

Crew: 4
Ammunition Wt: 50 kg per 60-round drum
Gun Wt: 260 kg
***Twilight: 2000** Ammunition Price:* $400 per drum (S/R)
***Merc: 2000** Ammunition Price:* $450 per drum (—/C)
***Twilight: 2000** Gun Price:* $7500 (—/R)
***Merc: 2000** Gun Price:* $5000 (—/R)

Weapon	*ROF*	*Mag*	*Rng*	*Ammo*	*Damage*	*Pen*
M75	10	60D	450	API	10	3/–2/–5
			450	HE	C:1, B:2	–8C

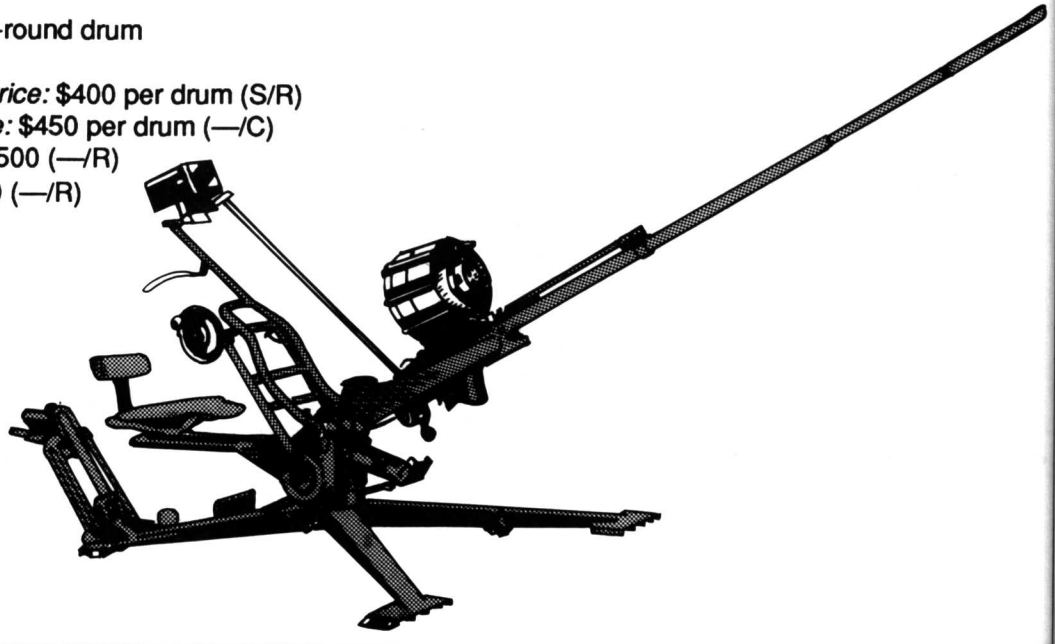

M167 Towed PIVAD

Weapon	*ROF*	*Mag*	*Rng*	*Ammo*	*Damage*	*Pen*
M167	60	1000B	450	API	10	3/–2/–5
			450	HE	C:1, B:2	–8C

M167 Towed PIVAD: This is the towed version of the famous PIVAD (product improved Vulcan air defense) antiaircraft gun. Part of the PIVAD improvement was the installation of fire control radar. Ammunition is normally belted in a mix of both HE and API types, the precise proportion depending upon circumstances. A ratio of 4:1 HE:API can be considered typical (in other words, out of a 60-round burst, 48 will be HE and 12 API).

Crew: 4
Ammunition Wt: 50 kg per 100-round belt
Gun Wt: 1.8 tons
Mag: 1000B
***Twilight: 2000** Ammunition Price:* $450 per belt (S/R)
***Merc: 2000** Ammunition Price:* $500 per belt (—/C)
***Twilight: 2000** Gun Price:* $75,000 (R/R)
***Merc: 2000** Gun Price:* $85,000 (—/S)

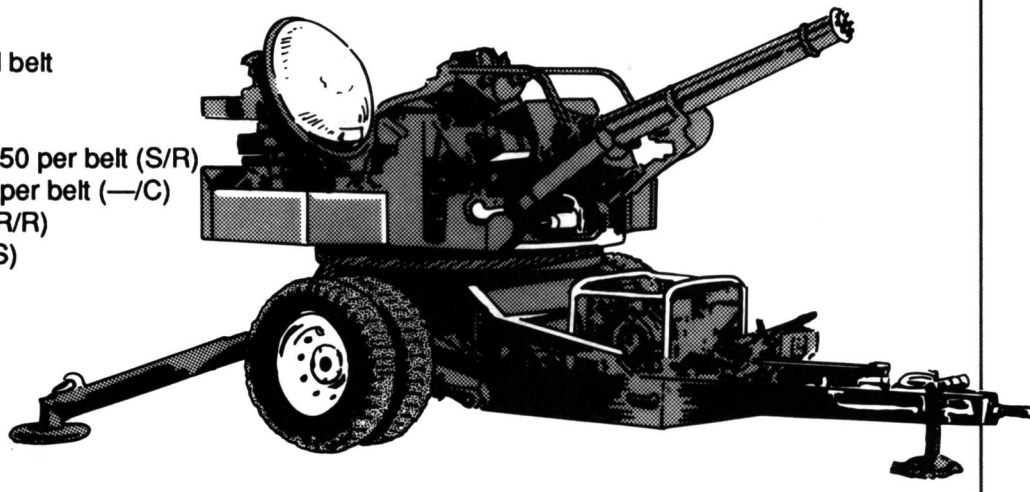

M1966 76.2mm Mountain Gun

Type	*Round*	*Rng*	*Damage*	*Pen*
76.2mm	HE	650	C:4, B:16	4C
	HEAT	650	C:4, B:8	55C

M1966 76.2mm Mountain Gun: The M-1966 is a light, easily portable artillery piece intended for use by troops operating in rough terrain or without motor transport. The weapon is designed to be towed by light vehicles or animals, and can be broken down into 10 78-kilogram loads for transport by mule or pack horse. The weapon is extremely popular with mercenary units and is one of the Russian armament industry's hottest sellers.

Crew: 6
Round Wt (All Types): 6.5 kg
Weapon Wt: 780 kg
***Twilight: 2000** Round Price (All Types):* $65 (—/S)
***Merc: 2000** Round Price (All Types):* $35 (—/C)
***Twilight: 2000** Weapon Price:* $8000 (—/S)
***Merc: 2000** Weapon Price:* $7500 (—/C)

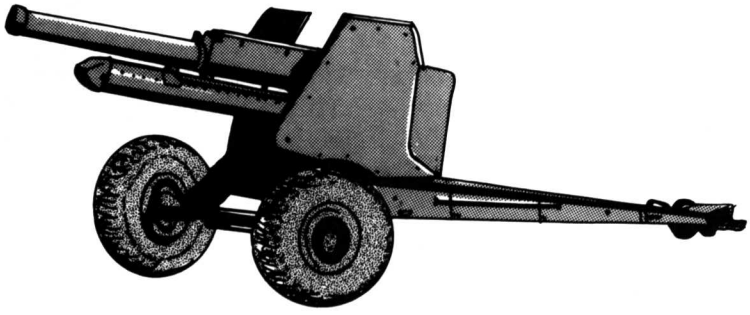

Oerlikon Iltis 25mm Infantry Gun

Oerlikon Iltis 25mm Infantry Gun: This weapon is unusual in that it was designed as a combination lightweight antihelicopter gun and antipersonnel weapon. The Iltis is configured so that the gunner can lie face down behind it, sighting through a fiber-optic cable link to the sight. The weapon has two feed devices, enabling the gunner to select between two types of rounds (for example, HE in one, API in the other).

Although it has yet to be adopted by any military, the Iltis is very popular with mercenary units and is thus one of Oerlikon's best-selling weapons. The weapon has no provision for target acquisition radar.

Crew: 2
Round Wt: 100 kg per case of 33 rounds
Weapon Wt: 240 kg
Mag: 30D
***Twilight: 2000** Weapon Price:* $5000 (R/—)
***Merc: 2000** Weapon Price:* $4500 (—/C)

API
***Twilight: 2000** Price:* $650 per case (C/S)
***Merc: 2000** Price:* $380 per case (—/S)

HE
***Twilight: 2000** Price:* $650 per case (C/S)
***Merc: 2000** Price:* $400 per case (—/S)

APDU
***Twilight: 2000** Price:* $2500 per case (S/R)
***Merc: 2000** Price:* $500 per case (—/R)

Weapon	*ROF*	*Mag*	*Rng*	*Ammo*	*Damage*	*Pen*
Iltis	10	30D	250	API	10	–2/–4/–6
			250	HE	C:1, B:2	–8C
			250	ADPI	12	3/–2/–4

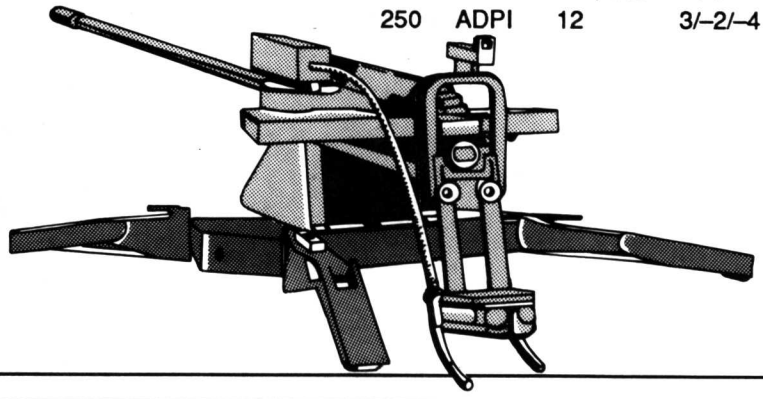

Oerlikon GAI C01/C04 20mm ADA

Oerlikon GAI C01/C04 20mm ADA: This is an older, Swiss-built, single-barreled, 20mm antiaircraft gun. It incorporates manual traverse and elevation, and no target acquisition radar. The weapon is inexpensive and easily maintained, and is very popular with military bargain seekers and less technically sophisticated forces. Mercenary units find it particularly useful in an antipersonnel mode. The GAI-C04 has a capacity of 150 rounds. A similar model, the GAI-C01, is identical except for a reduced capacity.

Crew: 3
Ammunition Wt: 50 kg per 100-round belt
Weapon Wt: GAI C01 534 kg, GAI C04 589 kg
Mag: GAI C01 75B, GAI C04 150B
***Twilight: 2000** Ammunition Price:* $450 per belt (S/R)
***Merc: 2000** Ammunition Price:* $500 per belt (—/C)
***Twilight: 2000** Gun Price:* $9000 (S/—)
***Merc: 2000** Gun Price:* $7500 (—/C)

Weapon	*ROF*	*Mag*	*Rng*	*Ammo*	*Damage*	*Pen*
GAI-C01	5	75B	450	API	10	3/–2/–5
			450	HE	C:1, B:2	–8C
GAI-C04	5	150B	450	API	10	3/–2/–5
			450	HE	C:1, B:2	–8C

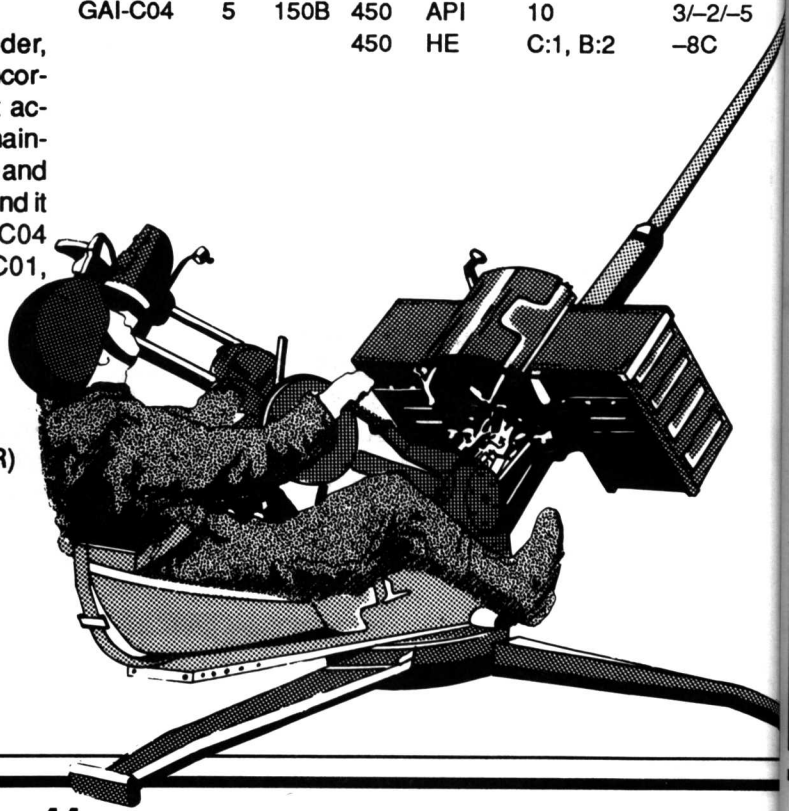

Oerlikon GAI-D01 Twin 20mm ADA

Weapon	*ROF*	*Mag*	*Rng*	*Ammo*	*Damage*	*Pen*
GAI-D01	10	240B	450	API	10	3/–2/–5
			450	HE	C:1, B:2	–8C

Oerlikon GAI-D01 Twin 20mm ADA: This weapon is a more advanced, twin-barreled version of the basic Oerlikon 20mm antiaircraft gun. It has power traverse and elevation, and a larger ammunition capacity than the GAI-C01/C04. It does not have integral target acquisition radar.

Crew: 5
Ammunition Wt: 50 kg per 100-round belt
Weapon Wt: 1.8 tons
Mag: 240B
***Twilight: 2000** Ammunition Price:* $450 per belt (S/R)
***Merc: 2000** Ammunition Price:* $500 per belt (—/C)
***Twilight: 2000** Gun Price:* $9000 (S/—)
***Merc: 2000** Gun Price:* $7500 (—/C)

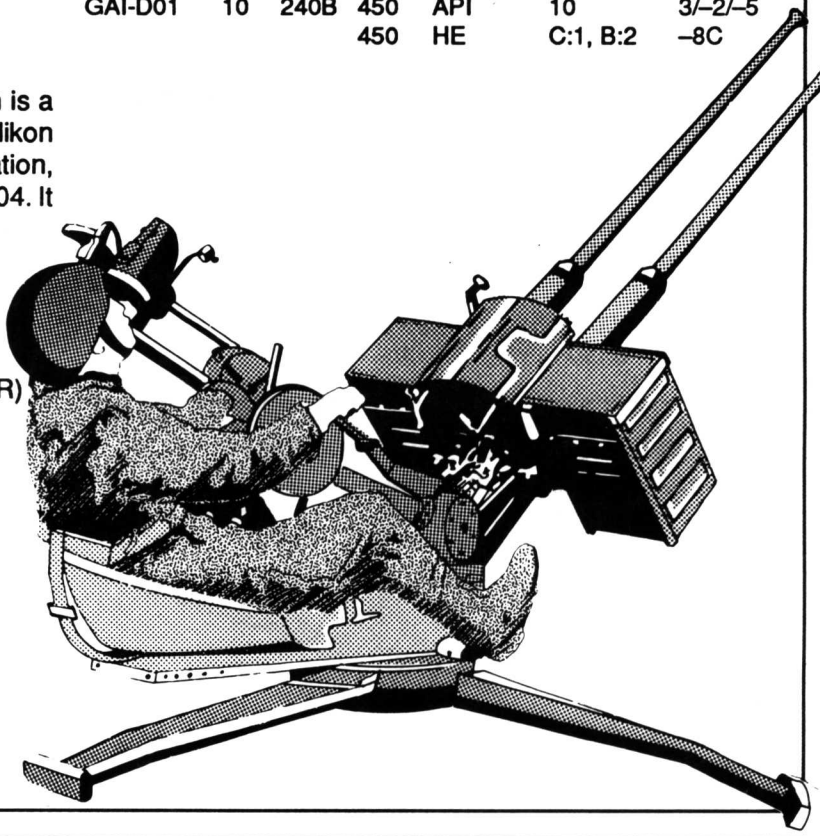

Oerlikon GBF-BOB Diana 25mm ADA

Oerlikon GBF-BOB Diana 25mm ADA: This is the same weapon used on the M691 Diana self-propelled air defense vehicle on a two-wheeled towed ground mount. The weapon has a dual feed system which enables the gunner to select from two ammunition types at the flip of a switch. The weapon is fitted with electronic fire control and target acquisition radar.

Crew: 3
Ammunition Wt: 100 kg per case of 33 rounds, belted
Weapon Wt: 4 tons
Mag: 500D
***Twilight: 2000** Gun Price:* $38,000 (S/—)
***Merc: 2000** Gun Price:* $25,000 (—/C)

API
***Twilight: 2000** Price:* $650 per case (C/S)
***Merc: 2000** Price:* $380 per case (—/S)

HE
***Twilight: 2000** Price:* $650 per case (C/S)
***Merc: 2000** Price:* $400 per case (—/S)

Weapon	*ROF*	*Mag*	*Rng*	*Ammo*	*Damage*	*Pen*
Diana	10	500D	250	API	10	–2/–4/–6
			250	HE	C:1, B:2	–8C

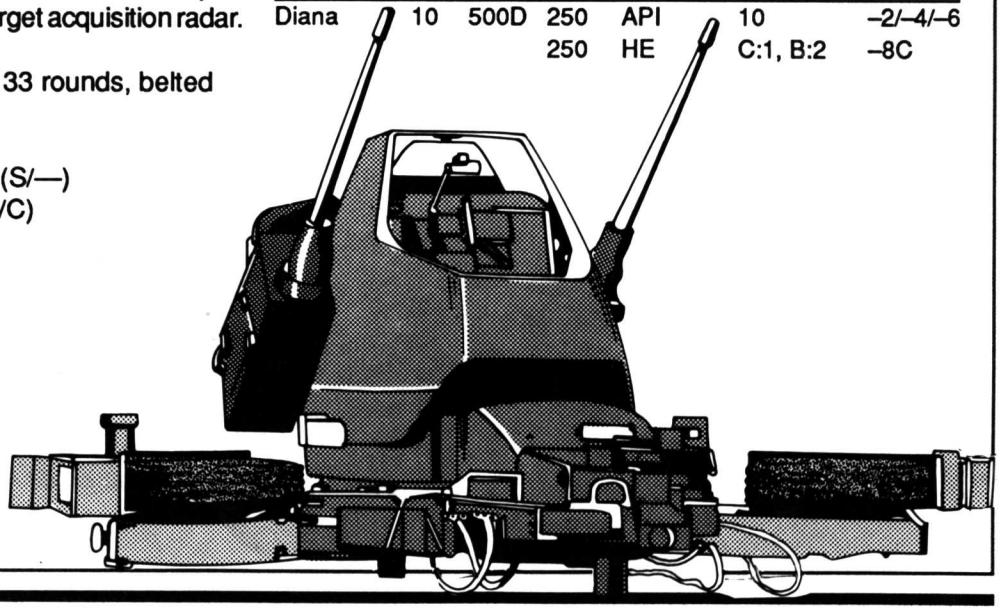

Oerlikon GBI-A01 25mm ADA

Oerlikon GBI-A01 25mm ADA: This is a Swiss-built, 25mm, towed antiaircraft gun. It has manual elevation and traverse, and no target acquisition radar.

Crew: 3
Ammunition Wt: 100 kg per case of 33 rounds, belted
Weapon Wt: 666 kg
Mag: 250B
***Twilight: 2000** Gun Price:* $9000 (S/—)
***Merc: 2000** Gun Price:* $7500 (—/S)

API
***Twilight: 2000** Price:* $650 per case (C/S)
***Merc: 2000** Price:* $380 per case (—/S)

HE
***Twilight: 2000** Price:* $650 per case (C/S)
***Merc: 2000** Price:* $400 per case (—/S)

Weapon	*ROF*	*Mag*	*Rng*	*Ammo*	*Damage*	*Pen*
GBI-A01	10	210B	250	API	10	–2/–4/–6
			250	HE	C:1, B:2	–8C

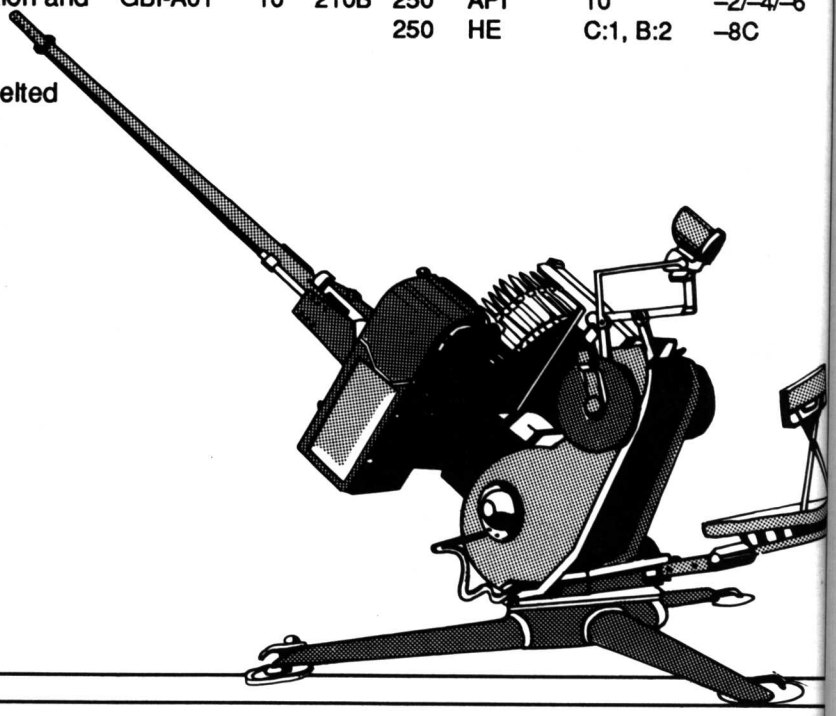

Oerlikon Twin 35mm ADA

Oerlikon Twin 35mm ADA: This is a Swiss-built, towed, twin-barreled, 35mm antiaircraft gun on a four-wheeled carriage. Ammunition bins for each gun hold up to 56 rounds each. Reloading is accomplished by dropping seven-round clips into each bin as the gun fires. The weapon has no integral target acquisition radar, but is usually linked to a battery TA radar set.

Crew: 3
Ammunition Wt: 4 kg per seven-round clip
Weapon Wt: 6.7 tons
Mag: 112D
***Twilight: 2000** Ammunition Price:* $65 per clip (S/R)
***Merc: 2000** Ammunition Price:* $48 per clip (—/S)
***Twilight: 2000** Weapon Price:* $35,000 per clip (S/R)
***Merc: 2000** Weapon Price:* $25,000 per clip (—/S)

Weapon	*ROF*	*Mag*	*Rng*	*Ammo*	*Damage*	*Pen*
35mm	10	112D	500	API	12	–2/–4/–6
			500	HE	C:2, B:3	–8C

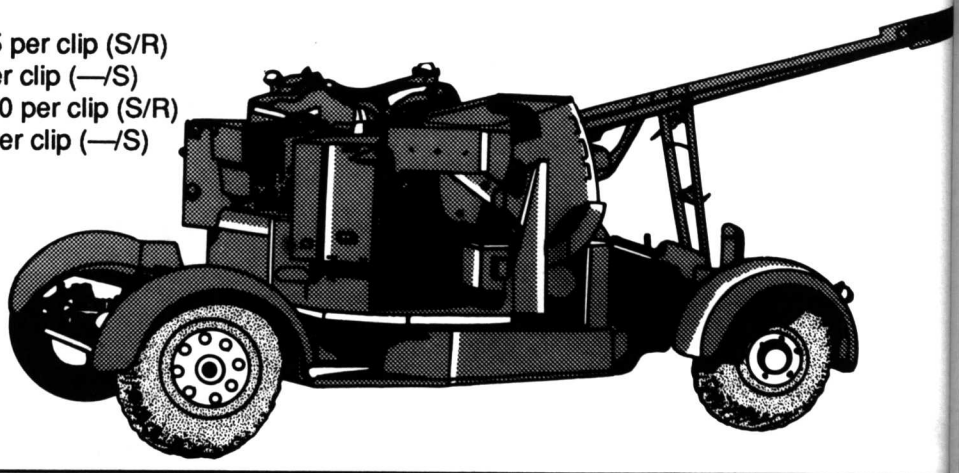

Rapira-3 125mm AT Gun

Rapira-3 125mm AT Gun: The Rapira-3 towed antitank gun uses the same large-caliber gun mounted on the T-72, T-80 and T-90 tanks. The Rapira-3 gun is manually loaded, and the gunner may aim during loading. The Rapira-3 has a gun shield (armor factor of 2) which provides cover for the gunner and loader if fired upon from the front.

The Rapira-3 takes eight combat turns to set up.

Crew: 4
Ammunition Wt: 40 kg
Gun Wt: 3.5 tons
Twilight: 2000 *Gun Price:* $50,000 (R/S)
Merc: 2000 *Gun Price:* $45,000 (—/R)

HE
Twilight: 2000 *Price:* $800 (S/C)
Merc: 2000 *Price:* $130 (—/C)

HEAT
Twilight: 2000 *Price:* $800 (R/S)
Merc: 2000 *Price:* $140 (—/C)

APFSDS
Twilight: 2000 *Price:* $800 (S/R)
Merc: 2000 *Price:* $150 (—/S)

APFSDSDU
Twilight: 2000 *Price:* $1500 (R/R)
Merc: 2000 *Price:* $175 (—/R)

Powder Charge
Charge Wt: 25 kg
Twilight: 2000 *Price:* $80 (S/C)
Merc: 2000 *Price:* $40 (—/C)

Type	*Round*	*Rng*	*Damage*	*Pen*
125mm	APFSDS	450	28	100/90/80/60
Rld: 2	APFSDSDU	450	28	110/100/90/70
	HEAT	400	C:10, B:20	110C
	HE	400	C:14, B:28	1C

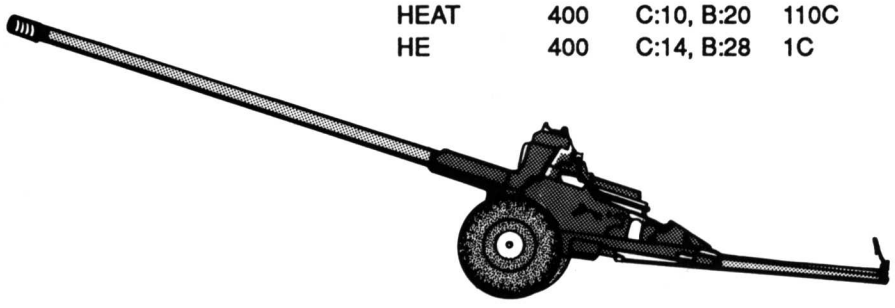

Rheinmetal Twin 20mm ADA

Rheinmetal Twin 20mm ADA: This is a German-built, twin-barreled, towed, 20mm antiaircraft gun on a two-wheel cruciform mount. The weapon has power traverse and elevation. Some models (notably those in service with the German Army and with German-supplied mercenaries) have target acquisition radar (which adds $5000 to the price).

Crew: 3
Ammunition Wt: 50 kg per 100-round belt
Weapon Wt: 2.2 tons
Mag: 500B
Twilight: 2000 *Ammunition Price:* $450 per belt (S/R)
Merc: 2000 *Ammunition Price:* $500 per belt (—/C)
Twilight: 2000 *Gun Price:* $12,000 (S/—)
Merc: 2000 *Gun Price:* $10,500 (—/C)

Weapon	*ROF*	*Mag*	*Rng*	*Ammo*	*Damage*	*Pen*
Rh 20mm	20	500B	450	API	10	3/–2/–5
			450	HE	C:1, B:2	–8C

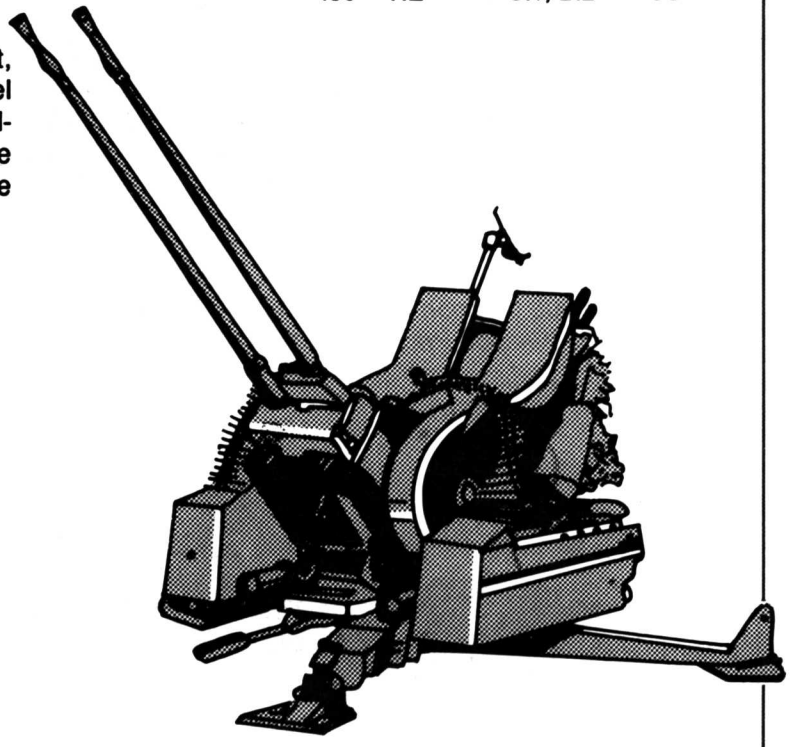

Royal Ordnance 105mm Light Gun

Royal Ordnance 105mm Light Gun: Entering service in 1974, the Royal Ordnance 105mm light gun is one of the more advanced towed artillery pieces in the world. The ammunition used with this weapon is also that used by the Abbot SP howitzer (but not that used by US 105mm howitzers). Prices and weights are for the two-part round/powder charge combination used by this weapon.

Crew: 5
Ammunition Wt: 16 kg
Weapon Wt: 1.8 tons
***Twilight: 2000** Weapon Price:* $600,000 (C/S)
***Merc: 2000** Weapon Price:* $300,000 (—/C)

HE
***Twilight: 2000** Round Price:* $225 (C/S)
***Merc: 2000** Round Price:* $115 (—/C)

HEAT and HESH
***Twilight: 2000** Round Price:* $250 (C/S)
***Merc: 2000** Round Price:* $120 (—/C)

WP and ILLUM
***Twilight: 2000** Round Price:* $240 (S/R)
***Merc: 2000** Round Price:* $130 (—/R)

Type	*Round*	*Rng*	*Damage*	*Pen*
105mm	HE	350	C:10, B:20	1C
IFR: 18 km	HEAT	350	C:10, B:16	100C
Rld: 2	HESH	350	C:10, B:16	80C
	WP	—	C:10, B:32	Nil
	ILLUM	—	C:10, B:32	Nil

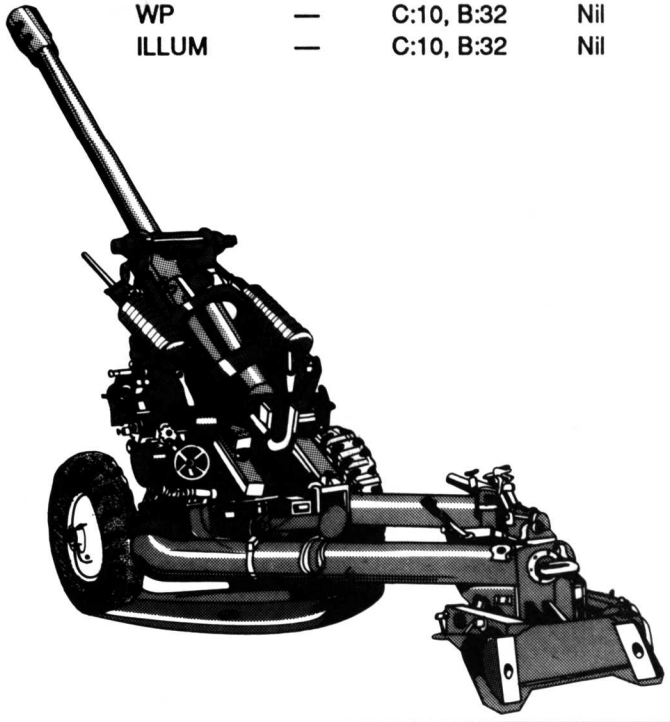

S-23 (M-1955) 180mm Gun

S-23 (M-1955) 180mm Gun: The S-23 design is based on a pre-WWII naval gun. For many years, this weapon was believed to be a 203mm gun (known as the M-1955). The S-23 was phased out of the Soviet Army in the mid-1980s (when it was still the Soviet Army), but it is still found in service with other armies throughout the world. A rocket-assisted HE projectile (HE-RAP) is available, with an indirect fire range of 48 kilometers.

Crew: 16
Weapon Wt: 20.4 tons
***Twilight: 2000** Weapon Price:* $750,000 (—/—)
***Merc: 2000** Weapon Price:* $500,000 (—/R)

HE
Ammunition Wt: 85 kg
***Twilight: 2000** Round Price:* $600 (—/—)
***Merc: 2000** Round Price:* $350 (—/R)

HE-RAP
Ammunition Wt: 90 kg
***Twilight: 2000** Round Price:* $1200 (—/—)
***Merc: 2000** Round Price:* $600 (—/R)

Type	*Round*	*Rng*	*Damage*	*Pen*
S-23	HE	450	C:32, B:40	4C
IFR: 30 km	HE-RAP	450	C:32, B:40	4C
Rld: 4				

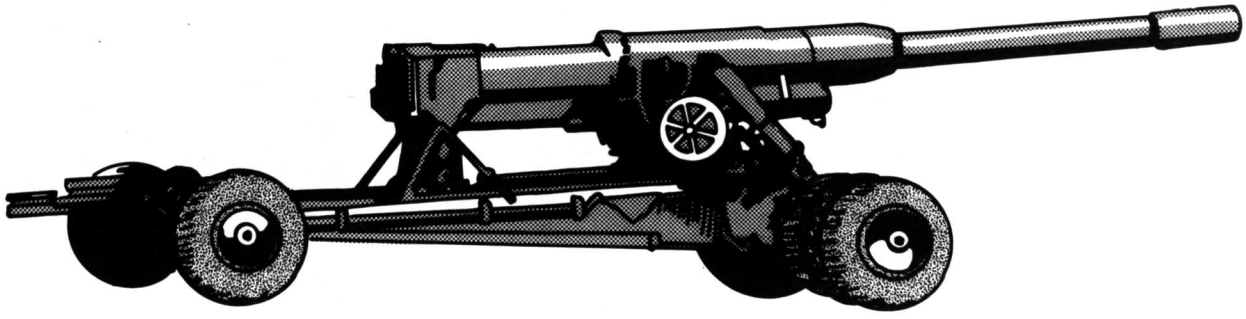



Stinger SSM



Type 69 RPG

Type 69 RPG



TOW ATGM



Folgore RCL



BTU Rifle Grenade

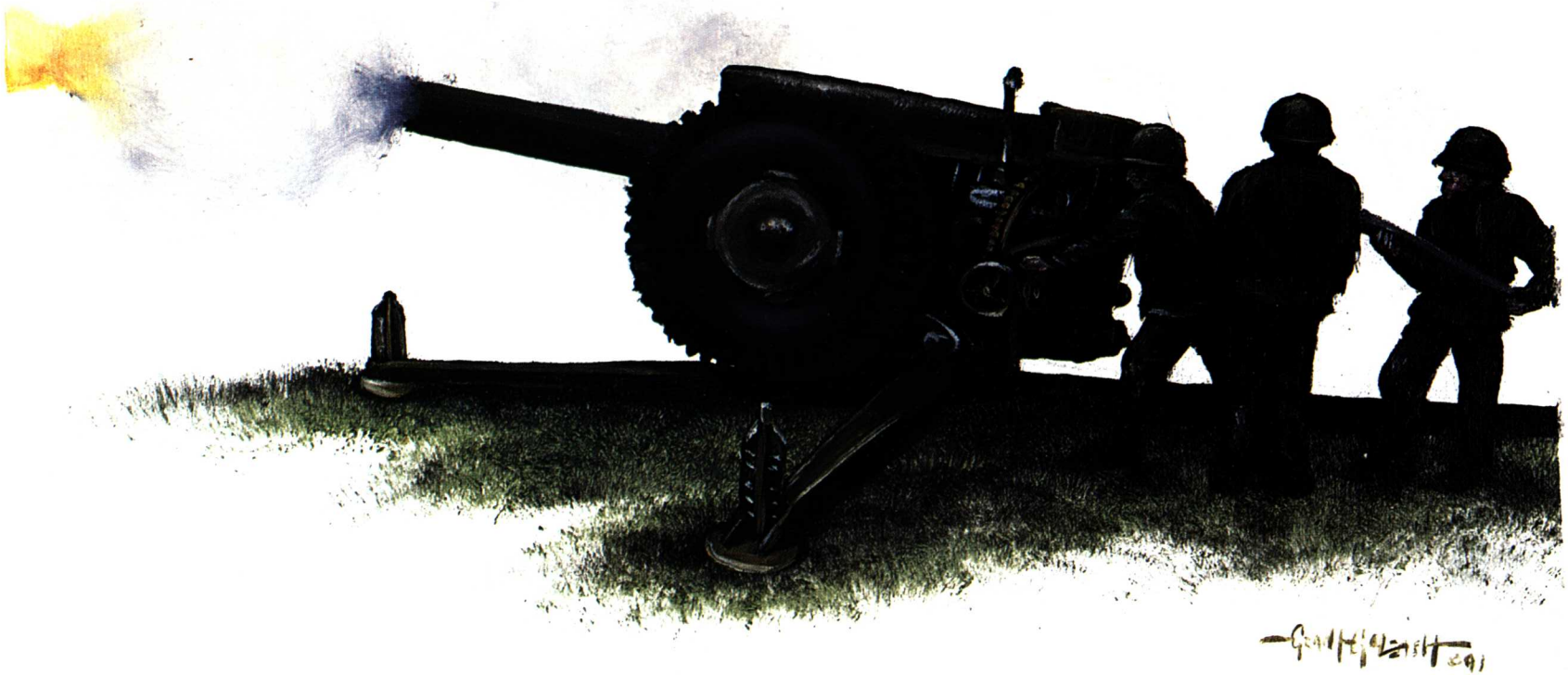

D -30 122mm Howitzer

D-30 122mm Howitzer

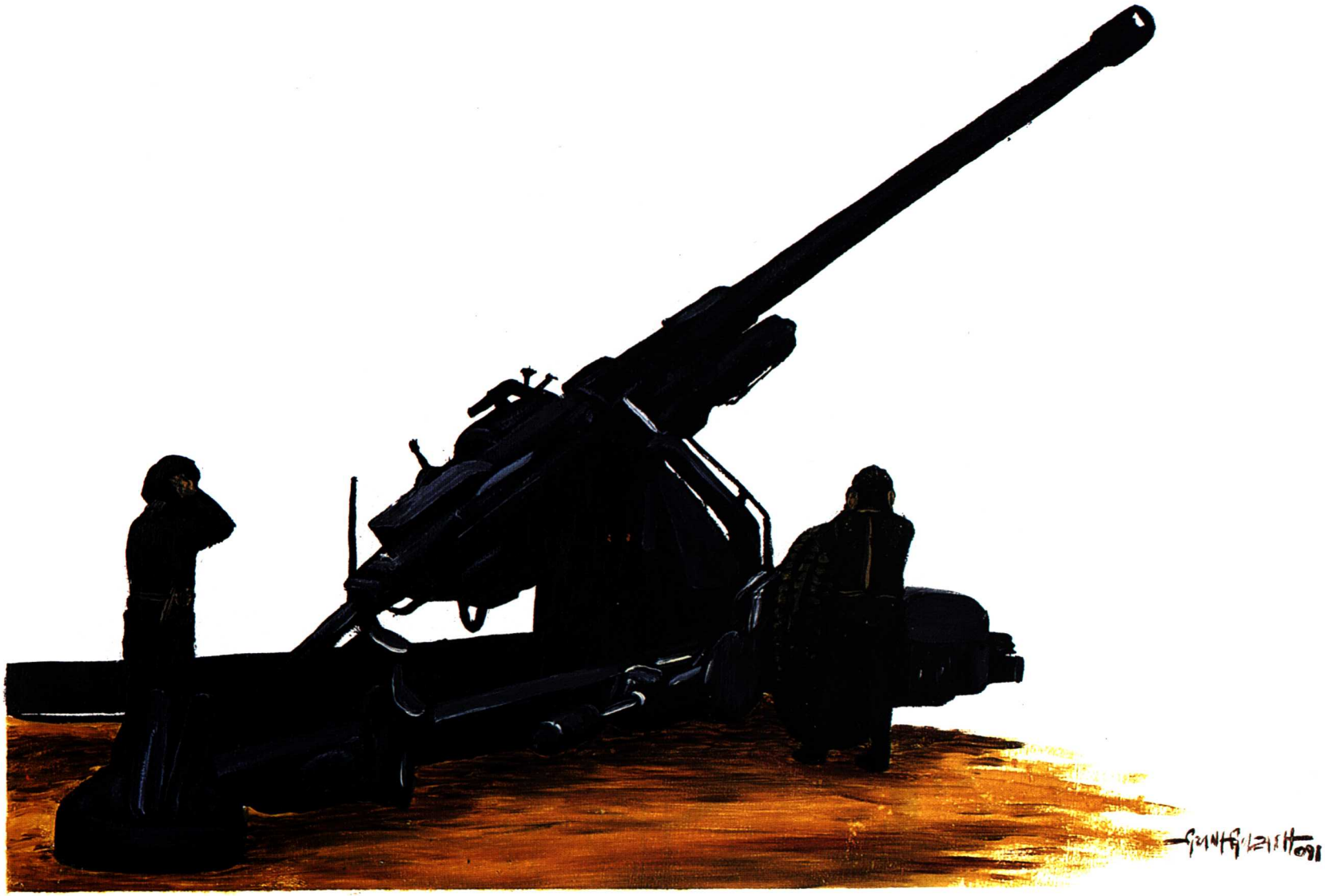

Giat TR 155mm Howitzer



Bofors BILL ATGM

S-60 57mm AA Gun

Type	Round	Rng	Damage	Pen
S-60	HET	1200	C:6, B:24	4C
	API	1200	22	20/10/5/1

S-60 57mm AA Gun: The S-60 is a ground-mount, single-barreled version of the weapon used in the ZSU-57-2 self-propelled antiaircraft gun. The weapon is almost always used in conjunction with some form of target acquisition radar at the battery level.

Crew: 7
Round Wt (All Types): 12 kg per four-round clip
Weapon Wt: 4.6 tons
***Twilight: 2000** Round Price (All Types):* $600 per clip (R/S)
***Merc: 2000** Round Price (All Types):* $300 per clip (—/C)
***Twilight: 2000** Weapon Price:* $100,000 (R/S)
***Merc: 2000** Weapon Price:* $75,000 (—/S)

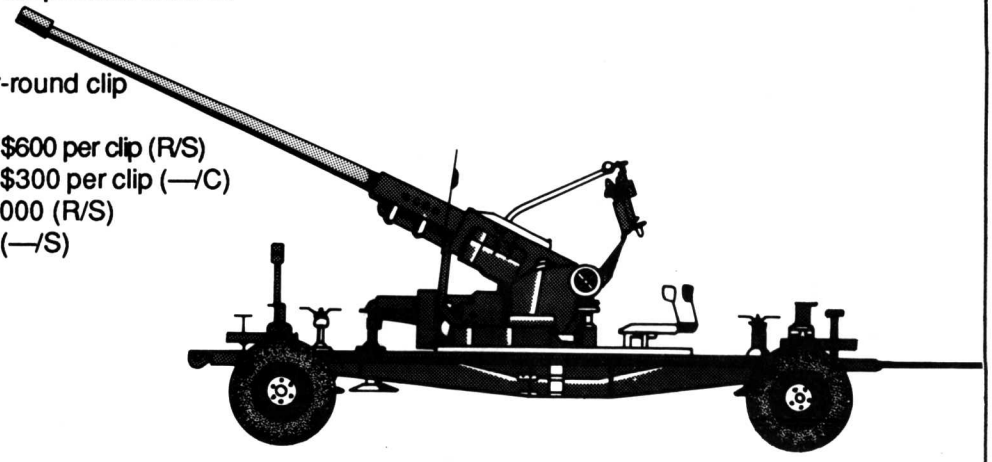

SD-44 and D-44 85mm AT Gun

SD-44 and D-44 85mm AT Gun: This is an obsolete, Russian-built, antitank gun, no longer in production except in China (where it is known as the Type 55 85mm AT gun). This weapon uses the same ammunition as the ASU-85 self-propelled gun.

The SD-44 has an integral motor and steering system, which permits the gun to relocate itself short distances without the need for a towing vehicle. The D-44 does not have this feature, but is otherwise identical.

The SD-44 is still in service with parachute units in the Russian Republic and elsewhere.

Round Wt (All Types): 10 kg
***Twilight: 2000** Round Price:* $900 (—/S)
***Merc: 2000** Round Price:* $450 (—/S)

SD-44
Crew: 5
Weapon Wt: 2.2 tons
***Twilight: 2000** Weapon Price:* $24,000 (—/S)
***Merc: 2000** Weapon Price:* $20,000 (—/S)

D-44
Crew: 7
Weapon Wt: 1.8 tons
***Twilight: 2000** Weapon Price:* $28,000 (—/R)
***Merc: 2000** Weapon Price:* $22,000 (—/R)

Type	Round	Rng	Damage	Pen
SD-44, D-44	APHE	600	C:5, B:10	50C
	HVAP	400	22	25/20/15

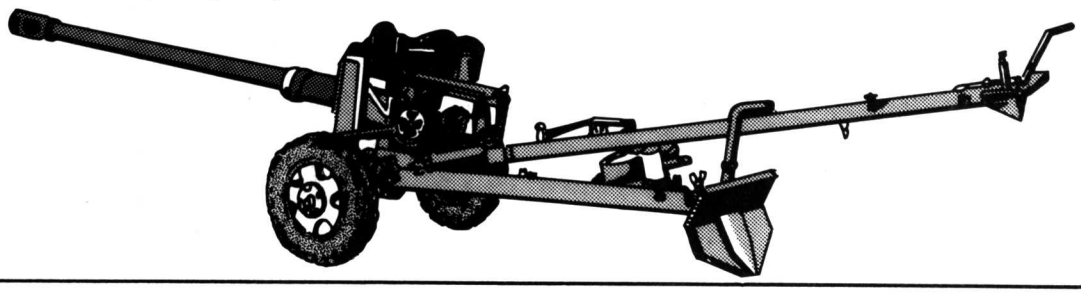

T-12 100mm AT Gun

T-12 100mm AT Gun: A Soviet-built, 100mm antitank gun, the T-12 replaced earlier 100mm and 85mm AT guns.

Crew: 6
Weapon Wt: 3.4 tons
Twilight: 2000 *Weapon Price:* $75,000 (—/R)
Merc: 2000 *Weapon Price:* $55,000 (—/R)

APHE
Round Wt: 21 kg
Twilight: 2000 *Round Price:* $650 (—/S)
Merc: 2000 *Round Price:* $455 (—/R)

HEAT
Round Wt: 22 kg
Twilight: 2000 *Round Price:* $650 (—/S)
Merc: 2000 *Round Price:* $455 (—/R)

HVAPDS-T
Round Wt: 25 kg
Twilight: 2000 *Round Price:* $750 (—/R)
Merc: 2000 *Round Price:* $525 (—/R)

WP
Round Wt: 18 (WP)
Twilight: 2000 *Round Price:* $700 (—/S)
Merc: 2000 *Round Price:* $490 (—/R)

Type	*Round*	*Rng*	*Damage*	*Pen*
T-12	HVAPDS-T	350	26	70/60/50/30
	APHE	300	C:6, B:12	70C
	HEAT	250	C:4, B:10	60C
	WP	250	C:3, B:20	Nil

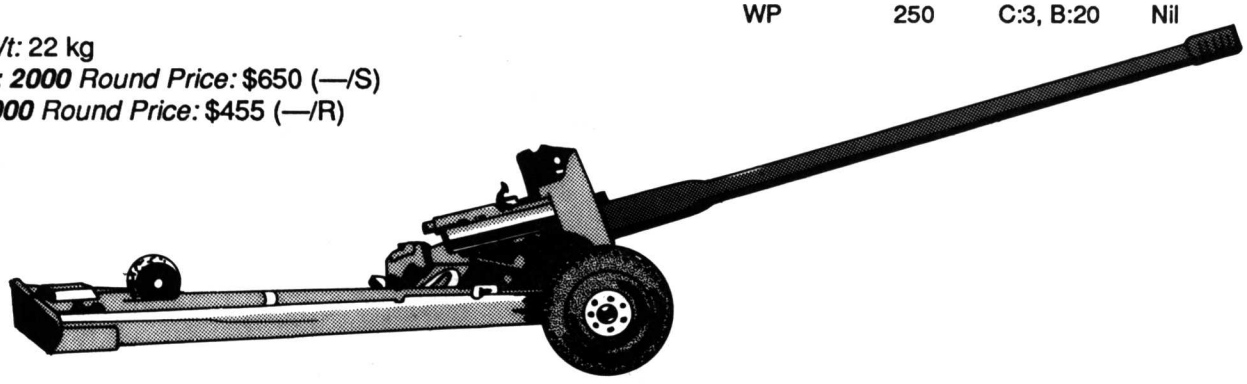

TCM Twin 20mm ADA

Weapon	*ROF*	*Mag*	*Rng*	*Ammo*	*Damage*	*Pen*
TCM	20	120B	450	API	10	3/–2/–5
			450	HE	C:1, B:2	–8C

TCM Twin 20mm ADA: The TCM was developed in Israel in the 1970s and was credited with shooting down 60% of all aircraft downed by Israeli air defenses during the Yom Kippur War. The weapon has armor protection for the gunner (armor factor 2), and can be found in both towed and vehicle-mounted versions. The TCM has no integral target acquisition radar, but can be linked into a battery headquarters TA system.

Crew: 2
Weapon Wt: 1.4 tons
Ammunition Wt: 50 kg per 100-round belt
Mag: 120B
Twilight: 2000 *Ammunition Price:* $450 per belt (S/R)
Merc: 2000 *Ammunition Price:* $500 per belt (—/C)
Twilight: 2000 *Gun Price:* $11,000 (S/—)
Merc: 2000 *Gun Price:* $8500 (—/C)

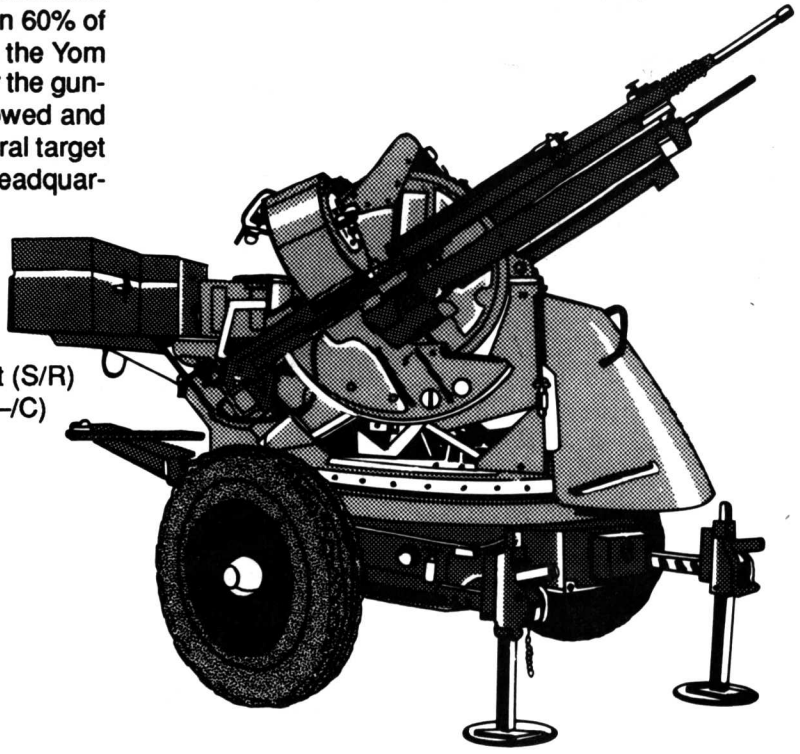

TR 155mm Gun

Type	*Round*	*Rng*	*Damage*	*Pen*
TR 155mm	HE	350	C:30, B:36	3C
IFR: 26 km	HEAT	350	C:20, B:28	110C
Rld: 2	WP	350	C:3, B:44	Nil
	CHEM	350	C:3, B:28	Nil
	ICM-DP	—	B:60	Grenade
	ILLUM	—	B:2000	Nil

ICM Attack Data

Round	*Close*	*Adj.*	*Conc*	*Burst*	*Pen*
155 ICM-DP	1-4	3	3	12	4C

TR 155mm Gun: A French-built, 155mm gun/howitzer, this weapon fires conventional rounds or rocket assisted projectiles (RAP). The TR's ammunition is not interchangeable with other weapons. A RAP version of the standard round has identical combat characteristics, but weighs 65 kilograms, costs twice as much and has an indirect fire range of 33 kilometers.

Crew: 10

Round Wt: 50 kg each

***Twilight** Weapon Price:* $650,000 (C/—); ***Merc** Weapon Price:* $500,000 (—/C)

HE

***Twilight** Price:* $500 (C/S); ***Merc** Price:* $140 (—/C)

HEAT

***Twilight** Price:* $750 (C/S); ***Merc** Price:* $175 (—/C)

ICM-DP

***Twilight** Price:* $3000 (R/R); ***Merc** Price:* $280 (—/S)

WP

***Twilight** Price:* $1500 (S/R); ***Merc** Price:* $190 (—/R)

CHEM

***Twilight** Price:* $500 (S/R); ***Merc** Price:* $190 (—/R)

ILLUM

***Twilight** Price:* $490 (S/R); ***Merc** Price:* $170 (—/S)

Powder Charge

Charge Wt: 25 kg

***Twilight** Price:* $60 (V/S); ***Merc** Price:* $55 (—/C)

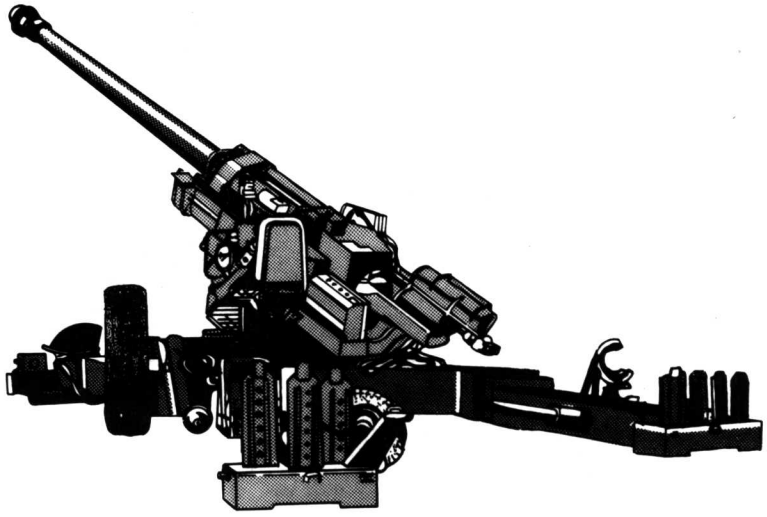

Type 59 57mm ADA

Type	*Round*	*Rng*	*Damage*	*Pen*
Type 59	HET	1200	C:6, B:24	4C

Type 59 57mm ADA : The Type 59 is a Chinese version of the Russian S-60 57mm antiaircraft gun, modified to suit Chinese manufacturing practices.

Crew: 7

Round Wt: 12 kg per four-round clip

Weapon Wt: 4.6 tons

***Twilight: 2000** Round Price:* $600 per clip (R/S)

***Merc: 2000** Round Price:* $300 per clip (—/C)

***Twilight: 2000** Weapon Price:* $100,000 (R/S)

***Merc: 2000** Weapon Price:* $75,000 (—/S)

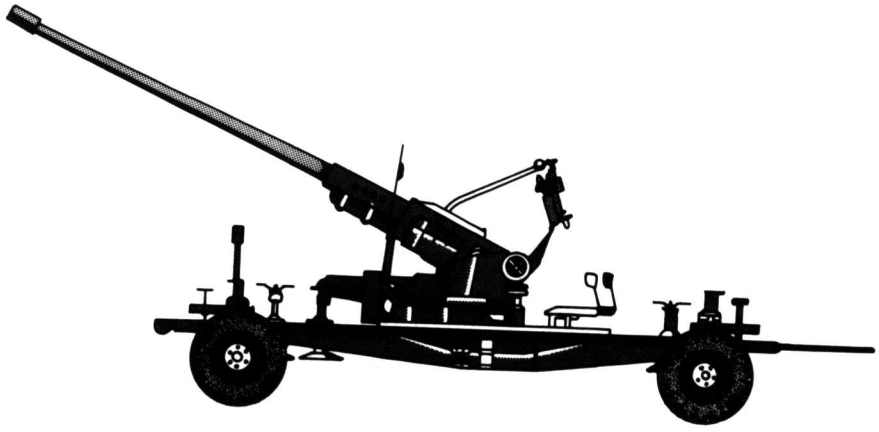

Type 74 37mm ADA

Type 74 37mm ADA: This is a two-barreled version of the Russian M-1939 37mm antiaircraft gun. The Chinese model, known as the Type 65, is essentially identical. The main differences are in engineering details, which have been modified to better fit Chinese manufacturing techniques.

Crew: 4
Ammunition Wt: 40 kg per 50-round drum
Gun Wt: 2.4 tons
Mag: 50D
Twilight: 2000 *Ammunition Price:* $30 per five-round clip (S/R)
Merc: 2000 *Ammunition Price:* $14 per five-round clip (—/S)
Twilight: 2000 *Gun Price:* $24,000 (—/R)
Merc: 2000 *Gun Price:* $32,000 (—/S)

Weapon	*ROF*	*Mag*	*Rng*	*Ammo*	*Damage*	*Pen*
Type 74	10	50D	1200	APT	16	5/1/–2
				HET	C:1, B:2	–6C

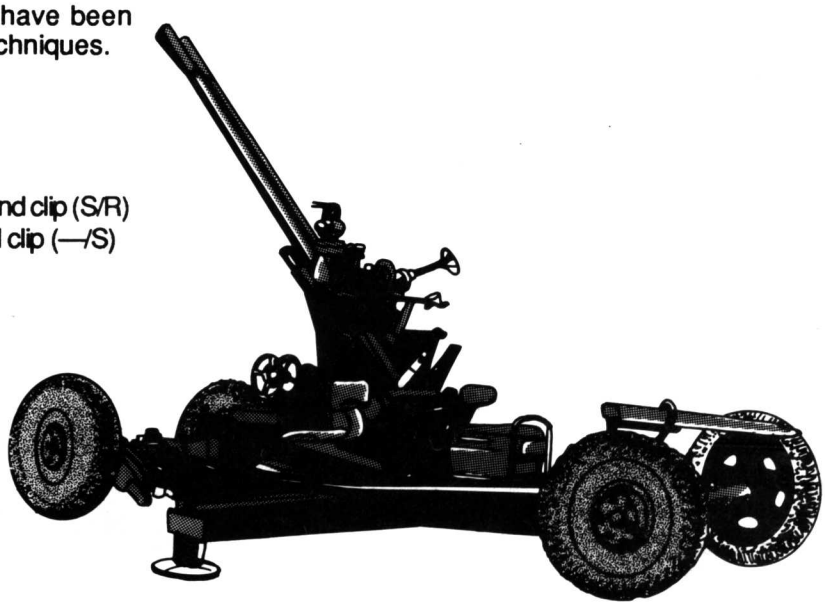

Type 85 25mm ADA

Type 85 25mm ADA: A Chinese-designed, twin 25mm antiaircraft autocannon, the Type 85 shows some overall similarities to the Russian ZU-23-2. The weapon has manual traverse and elevation, and no provision for target acquisition radar.

Crew: 3
Ammunition Wt: 100 kg per case of 33 rounds, belted
Weapon Wt: 1.5 tons
Mag: 66B
Twilight: 2000 *Gun Price:* $38,000 (—/S)
Merc: 2000 *Gun Price:* $25,000 (—/C)

APT and HEAP-T
Twilight: 2000 *Price:* $650 per case (C/S)
Merc: 2000 *Price:* $38 per case (—/S)

HE
Twilight: 2000 *Price:* $650 per case (C/S)
Merc: 2000 *Price:* $40 per case (—/S)

Weapon	*ROF*	*Mag*	*Rng*	*Ammo*	*Damage*	*Pen*
Type 85	10	66B	250	APT	10	–2/–4/–6
			250	HE	C:1, B:2	–8C
			250	HEAP-T	C:1, B:2	–4C

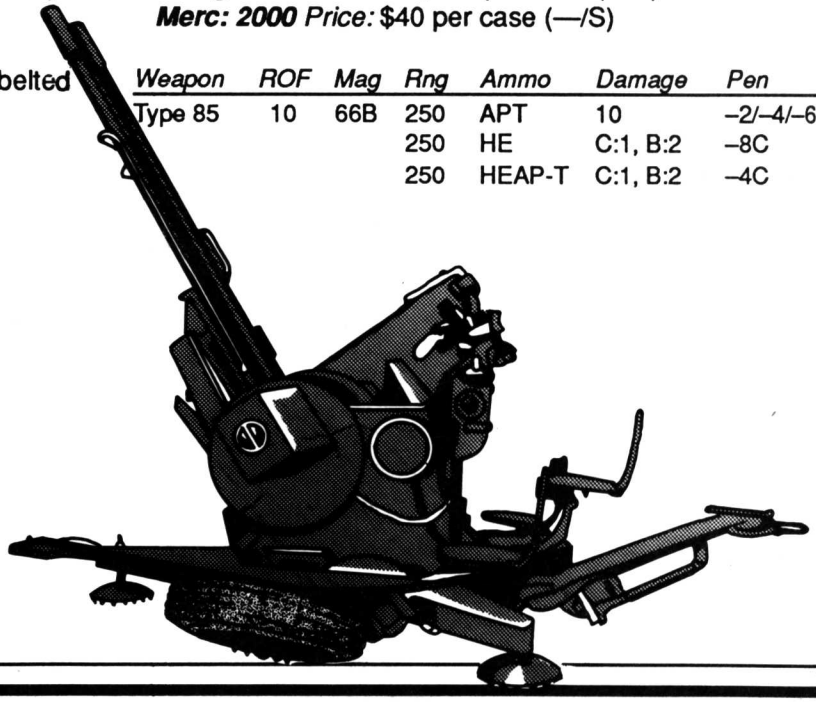

ZPU-1/ZPU-2 14.5mm AA Gun

ZPU-1/ZPU-2 14.5mm AA Gun: This is the antiaircraft version of the Soviet KPV 14.5mm heavy machinegun. It has no target acquisition radar.

The ZPU-2 has two barrels. The ZPU-1 (not illustrated) is similar in appearance, but has only one barrel. The ZPU-1 and ZPU-2 are no longer in service except in Africa, Asia and the Middle East. The weapons are still manufactured by Korea and several of the Chinese warlords (where the ZPU-2 is known as the Type 58).

Crew: 2-4
Ammunition Wt: 25 kg per 100-round belt
Mag: 1200B/2400B
Ammunition Price: $30 per 100-round belt (S/C)

*The 14.5mm Bloc round used in the ZPU-1, ZPU-2, ZPU-4 and KPV heavy machinegun was originally developed as a round for an antitank rifle (the PTRS-41). See **Infantry Weapons of the World** for information.*

ZPU-1
Weapon Wt: 413 kg
Twilight: 2000 *Weapon Price:* $6000 (R/S)
Merc: 2000 *Weapon Price:* $4000 (—/S)

ZPU-2
Weapon Wt: 620 kg
Twilight: 2000 *Weapon Price:* $7000 (R/C)
Merc: 2000 *Weapon Price:* $5000 (—/C)

Weapon	*ROF*	*Mag*	*Rng*	*Ammo*	*Damage*	*Pen*
ZPU-1	5	1200B	150	14.5mmB	12	2-2-3
ZPU-2	10	2400B	150	14.5mmB	12	2-2-3

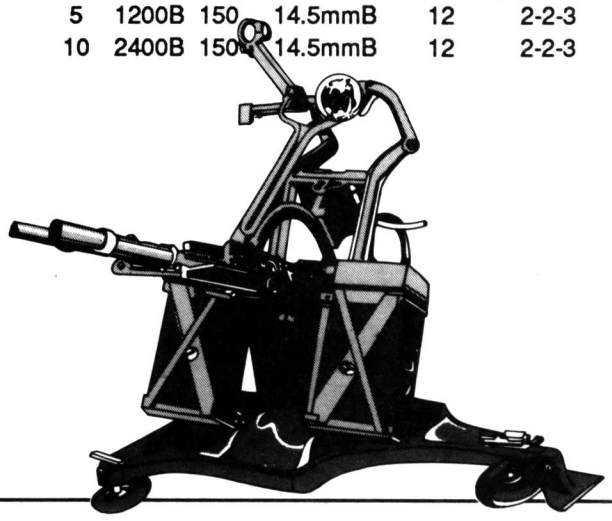

ZPU-4 14.5mm AA Gun

ZPU-4 14.5mm AA Gun: This is the antiaircraft version of the Soviet KPV 14.5mm heavy machinegun. The ZPU-4 has four barrels, as indicated by its name. It has no target acquisition radar. This weapon is still manufactured by the Russian Republic, Korea and several of the Chinese warlords (where it is known as the Type 56), and is in service with dozens of national armies and mercenary units.

Crew: 2-4
Ammunition Wt: 25 kg per 100-round belt
Mag: 4800B
Ammunition Price: $30 per belt (S/C)
Weapon Wt: 1.8 tons
Twilight: 2000 *Weapon Price:* $10,000 (R/C)
Merc: 2000 *Weapon Price:* $7500 (—/C)

Weapon	*ROF*	*Mag*	*Rng*	*Ammo*	*Damage*	*Pen*
ZPU-4	20	4800B	150	14.5mmB	12	2-2-3

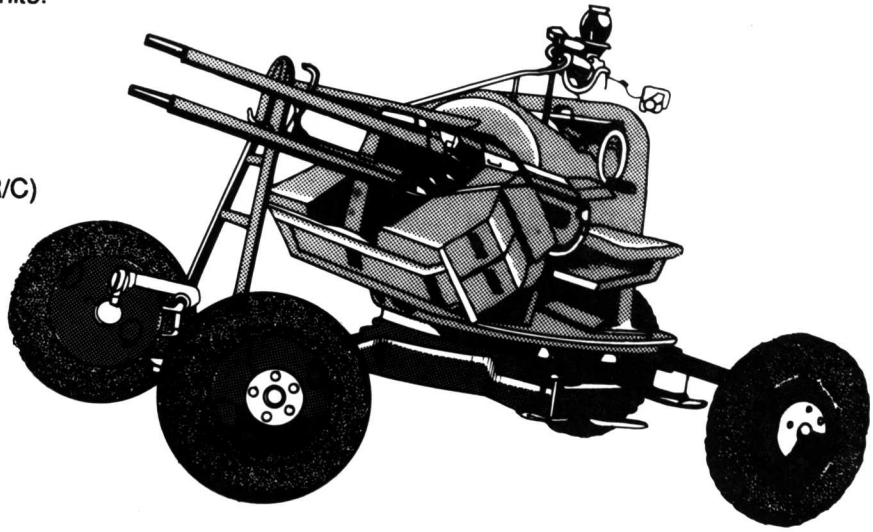

ZU-23-2 23mm AA Gun

Weapon	*ROF*	*Mag*	*Rng*	*Ammo*	*Damage*	*Pen*
23mm	10	100B	250	API	10	–2/–4/–6
			250	HE	C:1, B:2	–8C

ZU-23-2 23mm AA Gun: This twin-barreled version of the Soviet 23mm antiaircraft gun is still manufactured by the Russian Republic and several Chinese warlords. No provision is made for target acquisition radar.

Crew: 3
Ammunition Wt: 100 kg per case of 33, belted
Weapon Wt: 950 kg
Mag: 100B
***Twilight: 2000** Ammunition Price:* $500 per case (S/C)
***Merc: 2000** Ammunition Price:* $36 per case (—/S)
***Twilight: 2000** Weapon Price:* $8000 (R/S)
***Merc: 2000** Weapon Price:* $7000 (—/S)

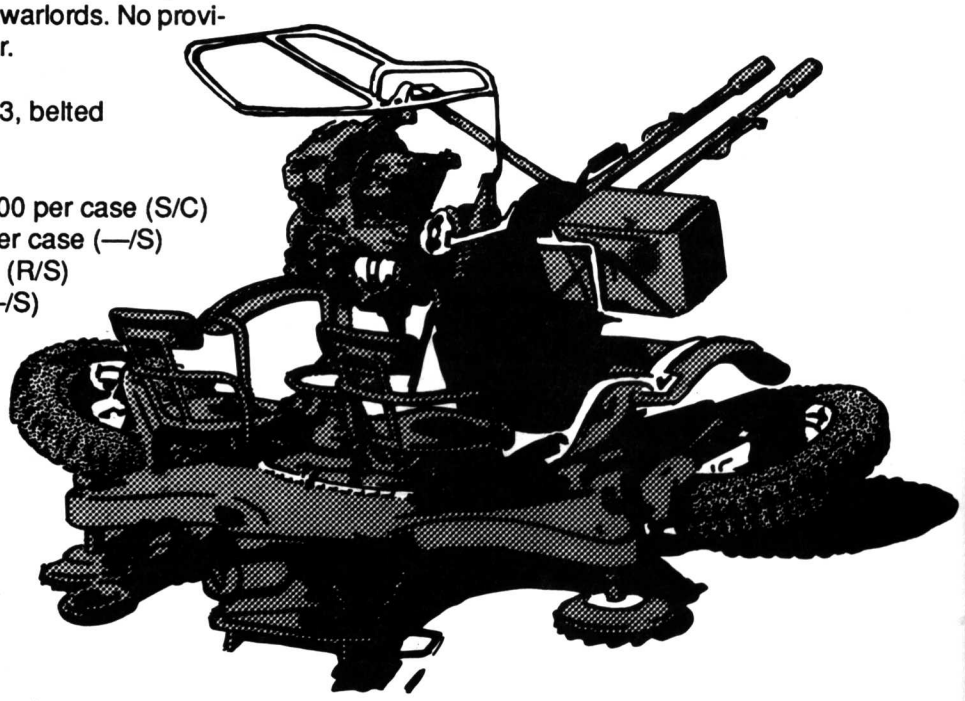

ZU-23-4 23mm AA Gun

Weapon	*ROF*	*Mag*	*Rng*	*Ammo*	*Damage*	*Pen*
23mm	20	100B	250	API	10	–2/–4/–6
			250	HE	C:1, B:2	–8C

ZU-23-4 23mm AA Gun: This is the same 23mm, quadruple-barreled autocannon found on the ZSU-23-4 Shilka self-propelled antiaircraft gun. No provision is made for target acquisition radar. The weapon is manufactured for the export market in an attempt to gain hard currency for the Russian Republic.

Crew: 4
Ammunition Wt: 100 kg per case of 33, belted
Weapon Wt: 1.8 tons
Mag: 100B
***Twilight: 2000** Ammunition Price:* $500 per case (S/C)
***Merc: 2000** Ammunition Price:* $36 per case (—/S)
***Twilight: 2000** Weapon Price:* $10000 (R/S)
***Merc: 2000** Weapon Price:* $8000 (—/S)

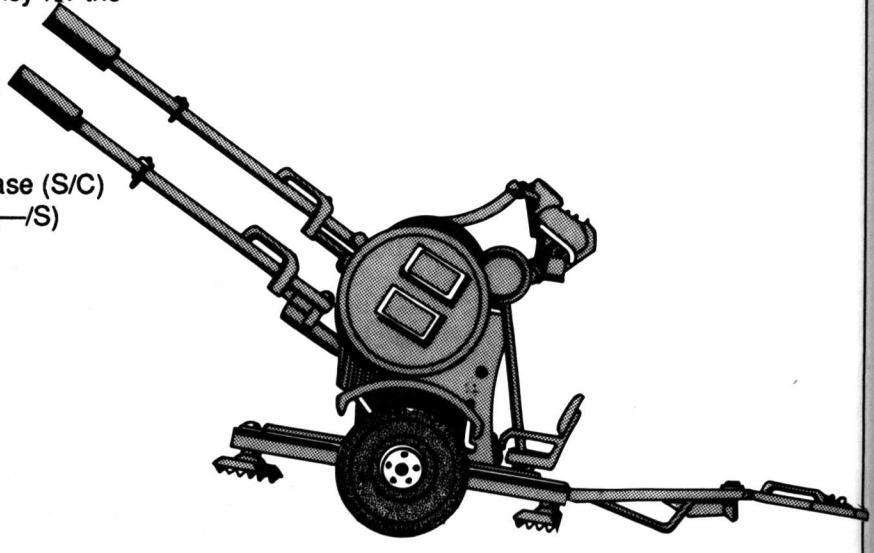

D-1 (M-1943) 152mm Howitzer

D-1 (M-1943) 152mm Howitzer: This aging Russian artillery piece is one of the last WWII-era weapons remaining in service with the Russians, albeit in low-readiness units. The weapon is also produced for local use and export by several Chinese warlords. The weapon has a gun shield (armor factor 2) which protects the gunner and two of the loaders from fragments.

Crew: 7
***Twilight: 2000** Price:* $500,000 (—/S)
***Merc: 2000** Price:* $450,000 (—/R)

HE
***Twilight: 2000** Price:* $500 (S/C)
***Merc: 2000** Price:* $150 (—/S)

HEAT
***Twilight: 2000** Price:* $750 (R/S)
***Merc: 2000** Price:* $180 (—/S)

WP
***Twilight: 2000** Price:* $1000 (R/S)
***Merc: 2000** Price:* $200 (—/R)

CHEM
***Twilight: 2000** Price:* $500 (R/S)
***Merc: 2000** Price:* $200 (—/R)

ILLUM
***Twilight: 2000** Price:* $500 (R/R)
***Merc: 2000** Price:* $190 (—/R)

Powder Charge
Charge Wt: 25 kg
***Twilight: 2000** Weapon Price:* $600,000 (—/R)
***Merc: 2000** Weapon Price:* $500,000 (—/S)

Type	*Round*	*Rng*	*Damage*	*Pen*
D-1	HE	300	C:24, B:36	3C
IFR: 19 km	HEAT	350	C:8, B:12	80C
Rld: 2	WP	300	C:3, B:44	Nil
	CHEM	300	C:3, B:28	Nil
	ILLUM	—	B:2000	Nil

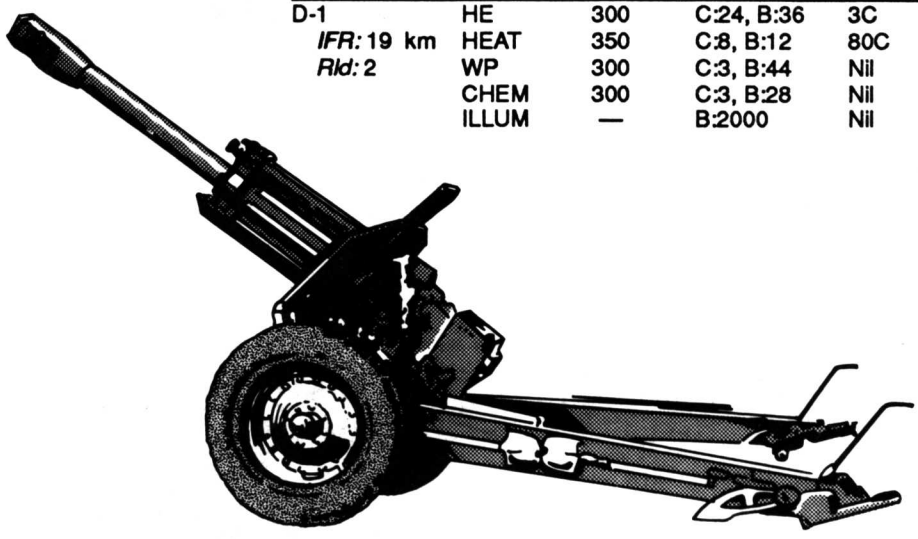

D-20 (M-1947) 152mm Howitzer

D-20 (M-1947) 152mm Howitzer: The D-20 is the Russian Republic's standard heavy artillery weapon, found in army-level artillery brigades and divisions. The weapon has a gun shield (armor factor 2) which protects the gunner and two of the loaders from fragments. The D-20 is used in China, where is known as the Type 66 152mm howitzer.

Crew: 10
***Twilight: 2000** Weapon Price:* $600,000 (—/S)
***Merc: 2000** Weapon Price:* $500,000 (—/R)

HE
***Twilight: 2000** Price:* $500 (S/C)
***Merc: 2000** Price:* $150 (—/S)

HEAT
***Twilight: 2000** Price:* $750 (R/S)
***Merc: 2000** Price:* $180 (—/S)

ICM
***Twilight: 2000** Price:* $3000 (R/R)
***Merc: 2000** Price:* $300 (—/R)

WP
***Twilight: 2000** Price:* $1000 (R/S)
***Merc: 2000** Price:* $200 (—/R)

CHEM
***Twilight: 2000** Price:* $500 (R/S)
***Merc: 2000** Price:* $200 (—/R)

ILLUM
***Twilight: 2000** Price:* $500 (R/R)
***Merc: 2000** Price:* $190 (—/R)

Powder Charge
Charge Wt: 25 kg
***Twilight: 2000** Price:* $60 (S/C)
***Merc: 2000** Price:* $50 (—/S)

Type	*Round*	*Rng*	*Damage*	*Pen*
D-1	HE	300	C:24, B:36	3C
IFR: 19 km	HEAT	350	C:8, B:12	80C
Rld: 2	WP	300	C:3, B:44	Nil
	CHEM	300	C:3, B:28	Nil
	ICM	—	B:60	Grenade
	ILLUM	—	B:2000	Nil

ICM Attack Data

Round	*Close*	*Adj.*	*Conc*	*Burst*	*Pen*
152 ICM	1-4	3	3	12	Nil

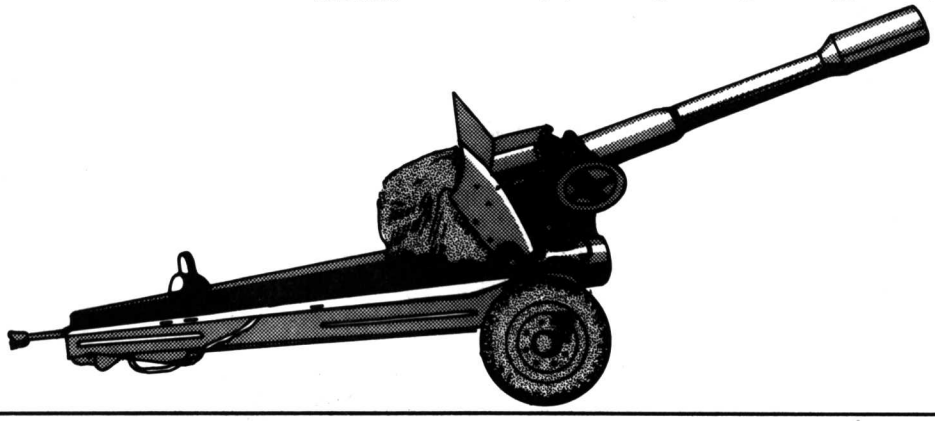

D-30 122mm Howitzer

D-30 122mm Howitzer: The D-30 towed howitzer is the same manually loaded howitzer mounted on the SAU-122 self-propelled howitzer. The D-30 has a gun shield (armor factor 15) which provides cover for the gunner (but not the loader) if fired upon from the front. The D-30 takes 12 30-second combat turns (five minutes) to set up.

Crew: 7
Weapon Wt: 3 tons
Round Wt (All Types): 25 kg
***Twilight: 2000** Howitzer Price:* $50,000 (S/C)
***Merc: 2000** Howitzer Price:* $85,000 (—/R)

HE
***Twilight: 2000** Price:* $350 per case (S/C)
***Merc: 2000** Price:* $135 per case (—/S)

HEAT
***Twilight: 2000** Price:* $500 per case (R/S)
***Merc: 2000** Price:* $140 per case (—/S)

ICM
***Twilight: 2000** Price:* $2000 per case (R/R)
***Merc: 2000** Price:* $200 per case (—/R)

WP, CHEM
***Twilight: 2000** Price:* $700 per case (R/S)
***Merc: 2000** Price:* $160 per case (—/R)

ILLUM
***Twilight: 2000** Price:* $350 per case (R/R)
***Merc: 2000** Price:* $150 per case (—/S)

Powder Charge
Charge Wt: 10 kg
***Twilight: 2000** Price:* $40 per case (S/V)
***Merc: 2000** Price:* $30 per case (—/S)

Type	*Round*	*Rng*	*Damage*	*Pen*
D-30	HE	300	C:16, B:28	1C
IFR: 15 km	HEAT	300	C:10, B:20	100C
Rld: 1	WP	300	C:3, B:36	Nil
	CHEM	300	C:3, B:12	Nil
	ICM	—	B:36	Grenade
	ILLUM	—	B:1500	Nil

ICM Attack Data

Round	*Close*	*Adj.*	*Conc*	*Burst*	*Pen*
122 ICM	1-3	2	3	12	Nil

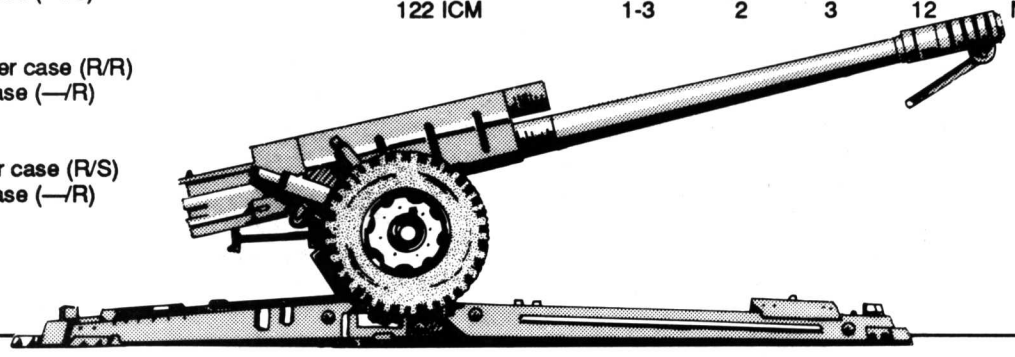

FH-70 155mm Gun-Howitzer

FH-70 155mm Gun-Howitzer: Developed in the late 1960s as a joint project between Italy, the UK and what was then West Germany, the FH-70 is now found in service with the original three nations and others. It is an advanced, towed, 155mm gun-howitzer capable of firing the full range of NATO standard 155mm rounds. Development of a self-propelled version, the SP-70, was cancelled in 1986.

Crew: 10
Round Wt (All Types): 50 kg each
***Twilight** Weapon Price:* $600,000 (S/R); ***Merc** Weapon Price:* $450,000 (—/R)

HE
***Twilight: 2000** Price:* $500 (C/S); ***Merc: 2000** Price:* $140 (—/C)

HEAT
***Twilight: 2000** Price:* $750 (C/S); ***Merc: 2000** Price:* $175 (—/C)

ICMDP
***Twilight: 2000** Price:* $3000 (R/R); ***Merc: 2000** Price:* $280 (—/S)

WP
***Twilight: 2000** Price:* $1500 (S/R); ***Merc: 2000** Price:* $190 (—/R)

CHEM
***Twilight: 2000** Price:* $500 (S/R); ***Merc: 2000** Price:* $190 (—/R)

ILLUM
***Twilight: 2000** Price:* $490 (R/R); ***Merc: 2000** Price:* $170 (—/S)

FASCAM:
***Twilight: 2000** Price:* $5000 (R/R); ***Merc: 2000** Price:* $300 (—/R)

Powder Charge
Charge Wt: 25 kg
***Twilight: 2000** Price:* $60 (V/S); ***Merc: 2000** Price:* $55 (—/C)

Type	*Round*	*Rng*	*Damage*	*Pen*
FH-70	HE	350	C:30, B:36	3C
IFR: 24 km	HEAT	350	C:20, B:28	110C
Rld: 2	WP	350	C:3, B:44	Nil
	CHEM	350	C:3, B:28	Nil
	ICMDP	—	B:60	Grenade
	ILLUM	—	B:2000	Nil
	FASCAM	—	B:124	Mine

ICM Attack Data

Round	*Close*	*Adj.*	*Conc*	*Burst*	*Pen*
155 ICMDP	1-4	3	3	12	4C

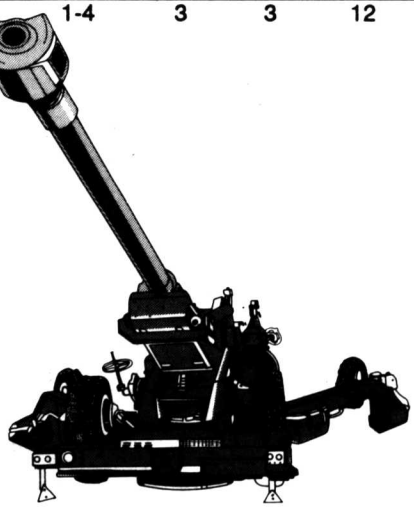

M-68 Soltam 155mm Gun-Howitzer

M-68 Soltam 155mm Gun-Howitzer: The M-68 Soltam is an Israeli design developed to provide a heavy artillery piece for the Israeli army and for foreign sale to help boost the Israeli economy.

Crew: 10
Round Wt: 50 kg each
***Twilight** Weapon Price:* $700,000 (R/—); ***Merc** Weapon Price:* $500,000 (—/R)

HE
***Twilight: 2000** Price:* $500 (C/S); ***Merc: 2000** Price:* $140 (—/C)

HEAT
***Twilight: 2000** Price:* $750 (C/S); ***Merc: 2000** Price:* $175 (—/C)

ICMDP
***Twilight: 2000** Price:* $3000 (R/R); ***Merc: 2000** Price:* $280 (—/S)

WP
***Twilight: 2000** Price:* $1500 (S/R); ***Merc: 2000** Price:* $190 (—/R)

CHEM
***Twilight: 2000** Price:* $500 (S/R); ***Merc: 2000** Price:* $190 (—/R)

ILLUM
***Twilight: 2000** Price:* $490 (R/R); ***Merc: 2000** Price:* $170 (—/S)

FASCAM
***Twilight: 2000** Price:* $5000 (R/R); ***Merc: 2000** Price:* $300 (—/R)

Powder Charge
Charge Wt: 25 kg
***Twilight: 2000** Price:* $60 (V/S); ***Merc: 2000** Price:* $55 (—/C)

Type	*Round*	*Rng*	*Damage*	*Pen*
M-68	HE	350	C:30, B:36	3C
IFR: 24 km	HEAT	350	C:20, B:28	110C
Rld: 2	WP	350	C:3, B:44	Nil
	CHEM	350	C:3, B:28	Nil
	ICMDP	—	B:60	Grenade
	ILLUM	—	B:2000	Nil
	FASCAM	—	B:124	Mine

ICM Attack Data

Round	*Close*	*Adj.*	*Conc*	*Burst*	*Pen*
155 ICMDP	1-4	3	3	12	4C

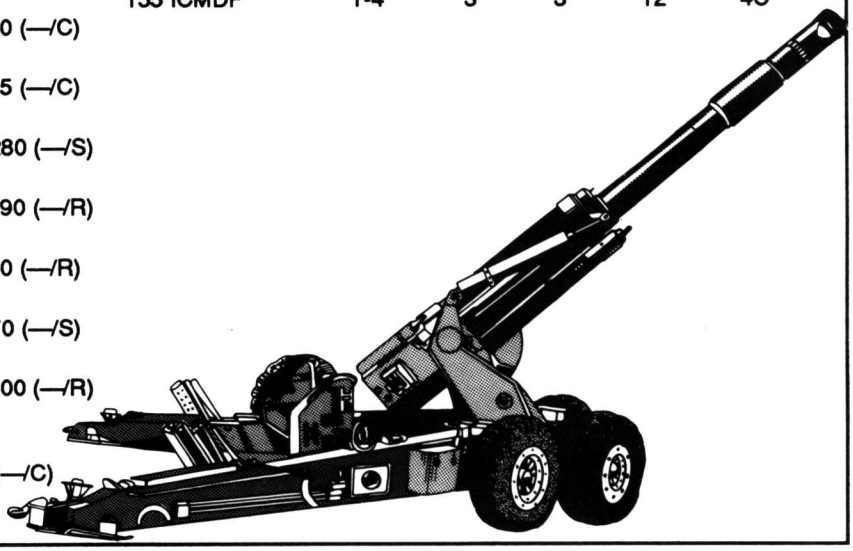

M-1931 (BM-4M) 203mm Howitzer

M-1931 (BM-4M) 203mm Howitzer: This weapon is the towed version of the heaviest artillery in Russian service, and is basically a modernization of a WWII design. A few may be found in service in other armies.

Crew: 14+
Ammunition Wt: 9 6 kg
Weapon Wt: 21.8 tons
***Twilight: 2000** Ammunition Price:* $900 (S/R)
***Merc: 2000** Ammunition Price:* $750 (—/R)
***Twilight: 2000** Weapon Price:* $1,000,000 (R/—)
***Merc: 2000** Weapon Price:* $850,000 (—/R)

Powder Charge
Wt: 22 kg
***Twilight: 2000** Price:* $600 (S/R)
***Merc: 2000** Price:* $400 (—/R)

Type	*Round*	*Rng*	*Damage*	*Pen*
M-1931	HE	400	C:36, B:44	4C
IFR: 18 km				
Rld: 8				

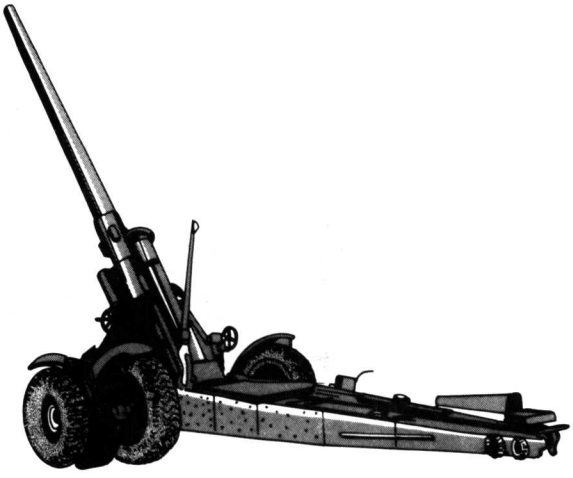

ADATS

Missile	*Rng*	*Guidance*	*Acc. Level*
ADATS	6 km	IR	Average

ADATS: Developed by the Swiss as a private venture for export, the ADATS was adopted by the US Army as a heavy tactical missile for both air defense and antitank use (hence the name ADATS). Antiaircraft stats are given below (Antitank stats are on page 13).

Ammo: ADATS
Missile Wt: 35 kg
Launcher Wt: 35 kg
Twilight: 2000 *Missile Price:* $3500 (R/—)
Merc: 2000 *Missile Price:* $3500 (—/S)
Twilight: 2000 *Launcher Price:* $5500 (R/—)
Merc: 2000 *Launcher Price:* $75,000 (—/S)

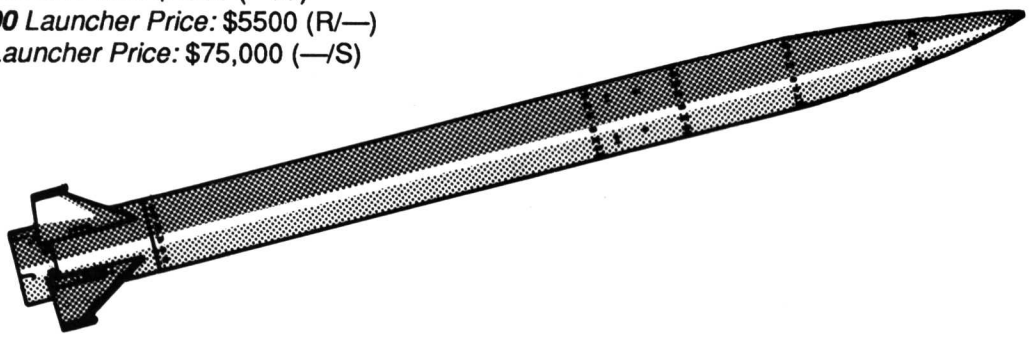

Blowpipe

Missile	*Rng*	*Guidance*	*Acc. Level*
Blowpipe	3.5 km	CMD	Difficult

Blowpipe: The Blowpipe is an older, British, shoulder-fired, antiaircraft missile, manufactured for the export market by the British firm of Short Brothers Ltd.

Missile Wt: 11 kg
Launcher Wt: 6.2 kg
Twilight: 2000 *Missile Price:* $600 (R/—)
Merc: 2000 *Missile Price:* $425 (—/S)
Twilight: 2000 *Launcher Price:* $2500 (R/—)
Merc: 2000 *Launcher Price:* $1500 (—/S)

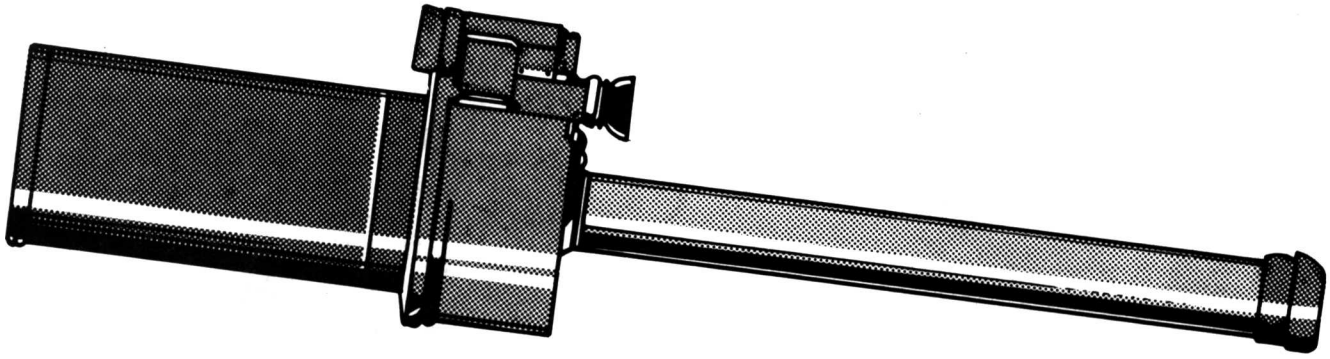

FIM-43 Redeye

Missile	*Rng*	*Guidance*	*Acc. Level*
FIM-43	5 km	IR	Difficult

FIM-43 Redeye: The FIM-43 Redeye is an older, American, shoulder-fired, antiaircraft missile with IR homing capability.

Missile Wt: 8 kg
Launcher Wt: 5 kg
***Twilight: 2000** Missile Price:* $600 (R/—)
***Merc: 2000** Missile Price:* $425 (—/S)
***Twilight: 2000** Launcher Price:* $2500 (R/—)
***Merc: 2000** Launcher Price:* $1500 (—/S)

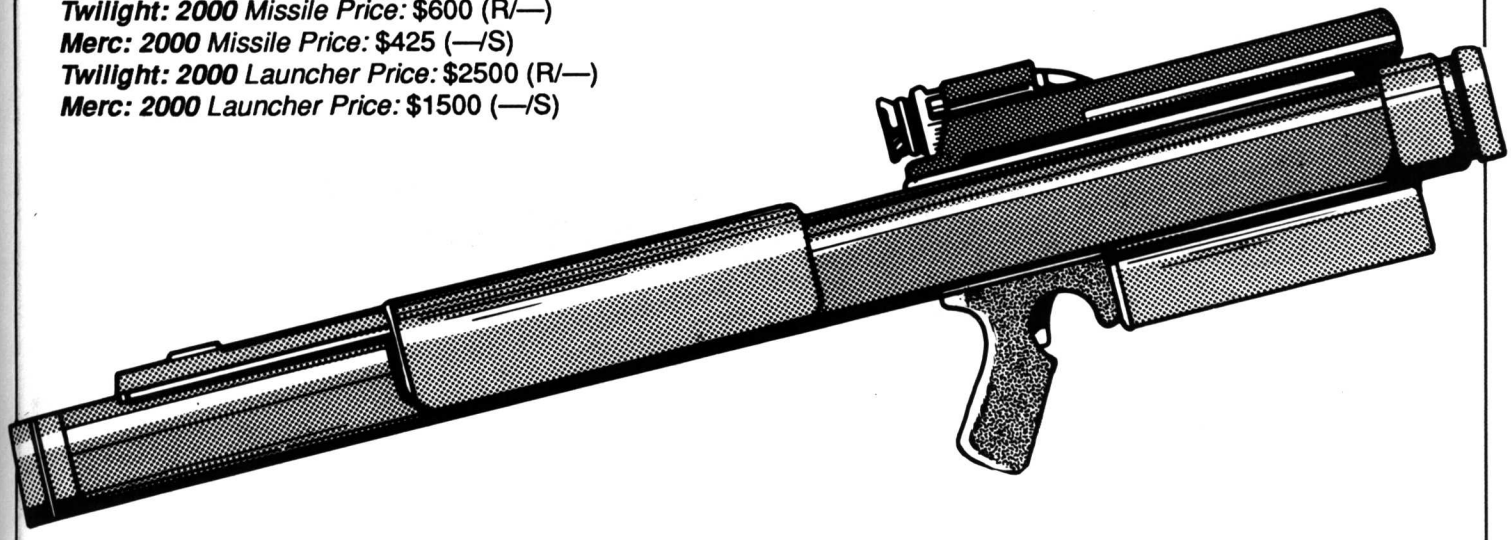

FIM-92 Stinger

Missile	*Rng*	*Guidance*	*Acc. Level*
FIM-92	6 km	IR	Average

FIM-92 Stinger: The FIM-92 Stinger is an American, shoulder-fired, antiaircraft missile with advanced IR homing capability. It is in the process of being replaced in US service by the FIM-99 Scorpion.

Missile Wt: 10 kg
Launcher Wt: 5 kg
***Twilight: 2000** Missile Price:* $650 (R/—)
***Merc: 2000** Missile Price:* $450 (—/S)
***Twilight: 2000** Launcher Price:* $3000 (R/—)
***Merc: 2000** Launcher Price:* $1650 (—/S)

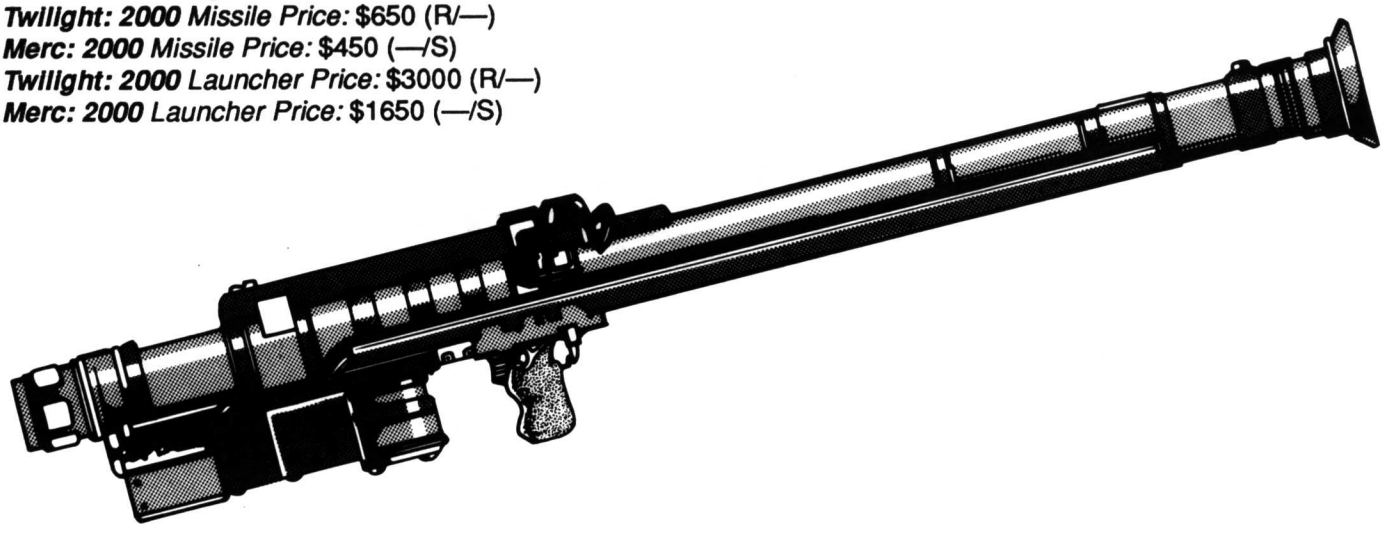

FIM-99 Scorpion

Missile	*Rng*	*Guidance*	*Acc. Level*
FIM-99	7 km	Radar/IR	Easy

FIM-99 Scorpion: The FIM-99 Scorpion is the newest American, shoulder-fired, antiaircraft missile, incorporating televisual and advanced IR guidance.

Missile Wt: 12 kg
Launcher Wt: 6 kg
***Twilight: 2000** Missile Price:* $750 (—/—)
***Merc: 2000** Missile Price:* $595 (—/R)
***Twilight: 2000** Launcher Price:* $4500 (—/—)
***Merc: 2000** Launcher Price:* $1750 (—/R)

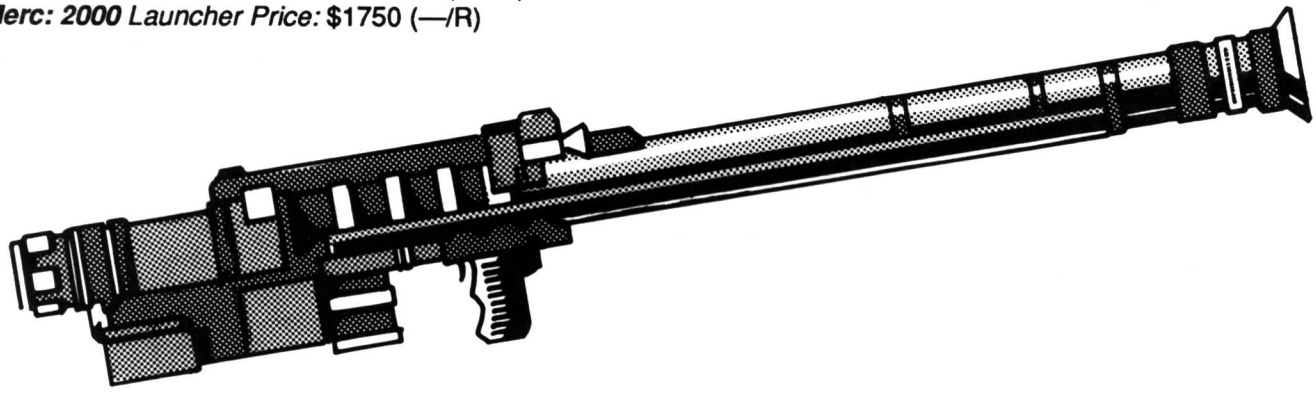

HN-5

Missile	*Rng*	*Guidance*	*Acc. Level*
HN-5	3.6 km	IR	Difficult

HN-5: The HN-5 is a Chinese-built, shoulder-fired, anti-aircraft missile with IR homing capability.

Missile Wt: 9 kg
Launcher Wt: 4.5 kg
***Twilight: 2000** Missile Price:* $750 (—/R)
***Merc: 2000** Missile Price:* $250 (—/R)
***Twilight: 2000** Launcher Price:* $1500 (—/R)
***Merc: 2000** Launcher Price:* $1000 (—/R)

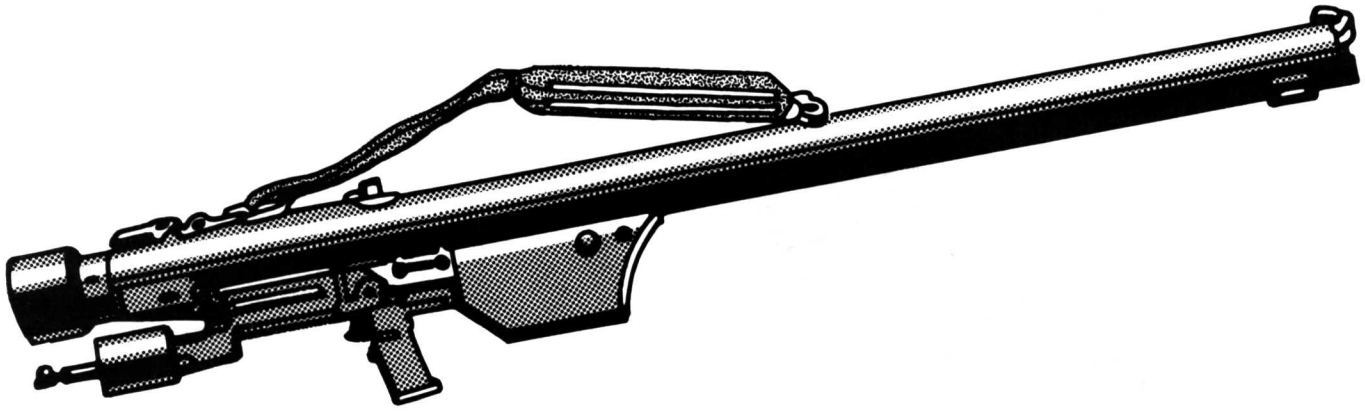

Javelin

Missile	*Rng*	*Guidance*	*Acc. Level*
Javelin	4 km	Radar	Average

Javelin: Manufactured by the British firm of Short Brothers Ltd, the Javelin is a shoulder-fired antiaircraft missile incorporating advanced guidance capability. Developed as a replacement for the Blowpipe, the Javelin is now the standard British, man-portable, antiaircraft missile.

Missile Wt: 15 kg
Launcher Wt: 9 kg
Twilight: 2000 *Missile Price:* $650 (R/—)
Merc: 2000 *Missile Price:* $450 (—/S)
Twilight: 2000 *Launcher Price:* $3000 (R/—)
Merc: 2000 *Launcher Price:* $1650 (—/S)

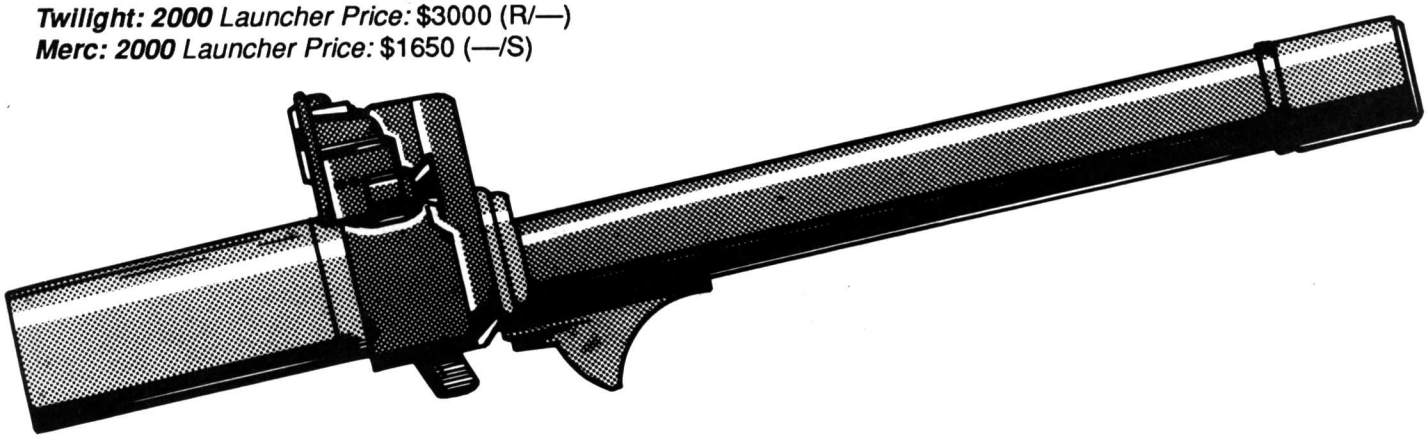

Matra Mistral

Missile	*Rng*	*Guidance*	*Acc. Level*
Mistral	6 km	IR	Average

Matra Mistral: This is a French-built antiaircraft missile fired from a man-portable pedestal mount or from a twin-tube vehicle mount (weight is multiplied by 1.5, price by 1.75).

Crew: 2
Missile Wt: 17 kg
Launcher Wt: 20 kg
Twilight: 2000 *Missile Price:* $3500 (R/—)
Merc: 2000 *Missile Price:* $2500 (—/S)
Twilight: 2000 *Launcher Price:* $35,000 (R/—)
Merc: 2000 *Launcher Price:* $20,000(—/S)

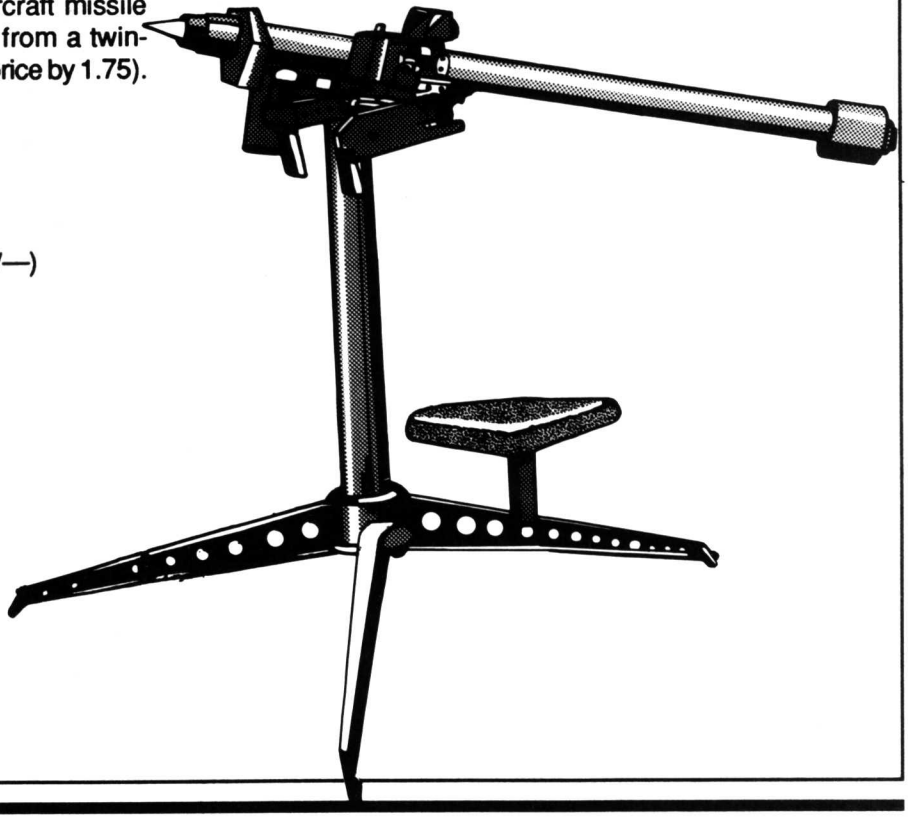

MBB-7 *Venusfliegenfalle*

Missile	*Rng*	*Guidance*	*Acc. Level*
MBB-7	7 km	Radar/IR	Easy

MBB-7 *Venusfliegenfalle*: This is a German-designed, shoulder-fired, antiaircraft missile with advanced target acquisition and homing characteristics. The MBB-7 *Venusfliegenfalle* (Venus fly-trap) has only recently entered active service and is rare outside of German forces. This weapon is only available in **Merc: 2000** and **Dark Conspiracy** campaigns since the background does not permit its development in **Twilight: 2000**.

Missile Wt: 11 kg
Launcher Wt: 5 kg
***Merc: 2000** Missile Price:* $595 (—/R)
***Merc: 2000** Launcher Price:* $1850 (—/R)

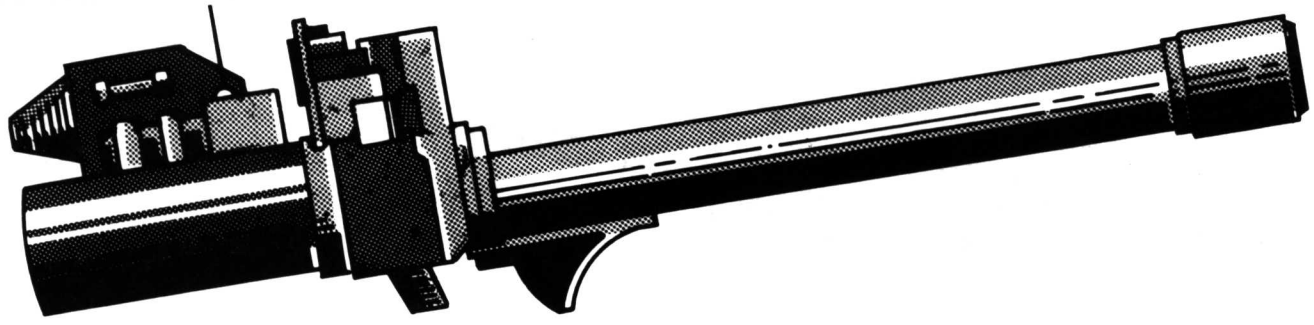

RBS-70/RBS-90

Missile	*Rng*	*Guidance*	*Acc. Level*
RBS-70	5 km	Cmd	Average

RBS-70/RBS-90: The RBS-70 is a Swedish-built, antiaircraft missile fired from a man-portable pedestal mount. The RBS-90 is a twin launcher system for the same missile.

Missile Wt: 15 kg
***Twilight: 2000** Missile Price:* $3500 (R/—)
***Merc: 2000** Missile Price:* $2500 (—/S)
***Twilight: 2000** Launcher Price:* $35,000 (R/—)
***Merc: 2000** Launcher Price:* $20,000(—/S)

RBS-70
Crew: 3
Launcher Wt: 15 kg

RBS-90
Crew: 5
Launcher Wt: 24 kg



SA-7 Grail

Missile	*Rng*	*Guidance*	*Acc. Level*
SA-7	3.6 km	IR	Difficult

SA-7 Grail: Known in the Russian Army as the *Strela* (arrow), the SA-7 Grail (its NATO designation) is a shoulder-fired antiaircraft missile with IR homing capabilities. The missile is no longer in use by Russian forces but is still manufactured for export.

Missile Wt: 9 kg
Launcher Wt: 4.5 kg
***Twilight: 2000** Missile Price:* $750 (—/R)
***Merc: 2000** Missile Price:* $250 (—/R)
***Twilight: 2000** Launcher Price:* $1500 (—/R)
***Merc: 2000** Launcher Price:* $1000 (—/R)

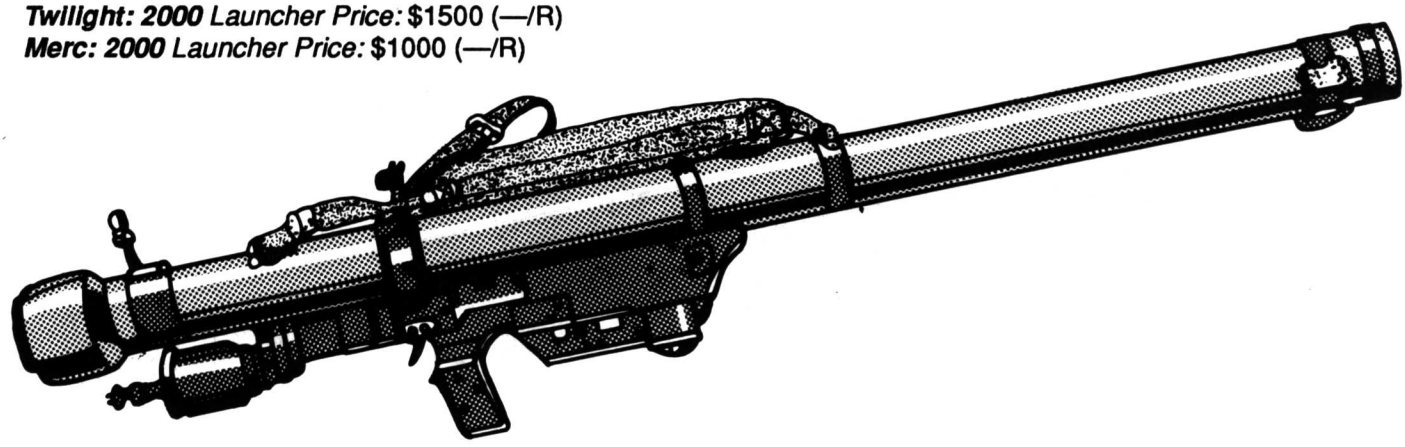

SA-14 Gremlin

Missile	*Rng*	*Guidance*	*Acc. Level*
SA-14	8 km	IR	Average

SA-14 Gremlin: Known in Russian service as the PZRK-I (*Perenosiy Zenitniy Raketniy Komplex "Igla"* or portable air defense weapon "needle"), this weapon is an improved version of the SA-7 Grail shoulder-fired antiaircraft missile. Unlike most antiaircraft missiles, it is a single-shot, disposable weapon.

Weapon Wt: 15 kg
***Twilight: 2000** Missile Price:* $600 (—/R)
***Merc: 2000** Missile Price:* $400 (—/S)
***Twilight: 2000** Launcher Price:* $2800 (—/R)
***Merc: 2000** Launcher Price:* $1450 (—/S)

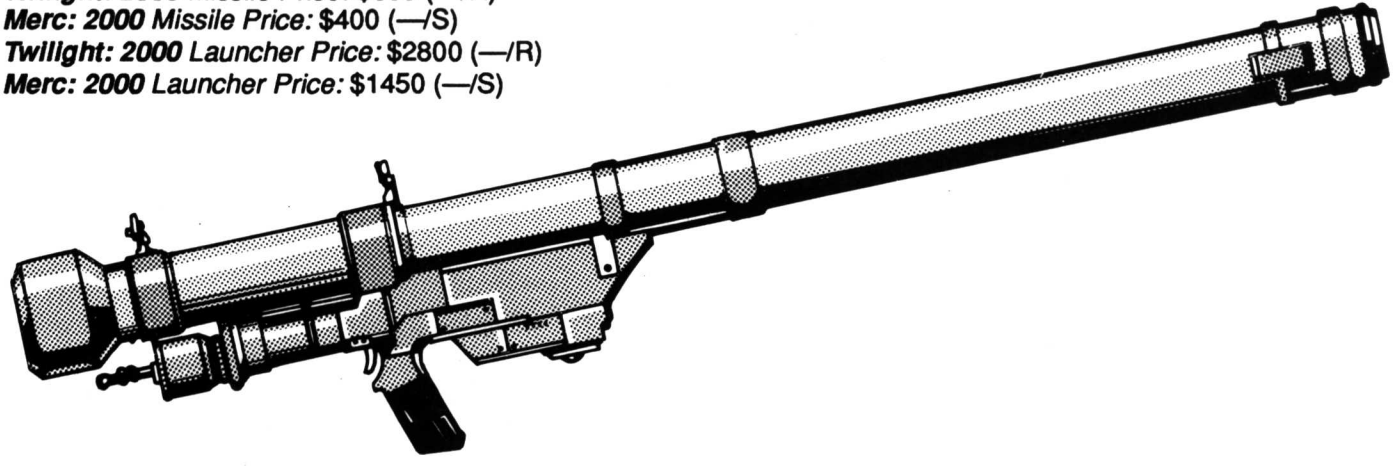

SA-16

Missile	*Rng*	*Guidance*	*Acc. Level*
SA-16	8 km	IR	Average

SA-16: The SA-16 is a Russian-designed, shoulder-fired antiaircraft missile with advanced IR homing capabilities.

Missile Wt: 10.5 kg
Launcher Wt: 4.5 kg
Twilight: 2000 *Missile Price:* $650 (—/R)
Merc: 2000 *Missile Price:* $450 (—/R)
Twilight: 2000 *Launcher Price:* $3000 (—/R)
Merc: 2000 *Launcher Price:* $1650 (—/R)

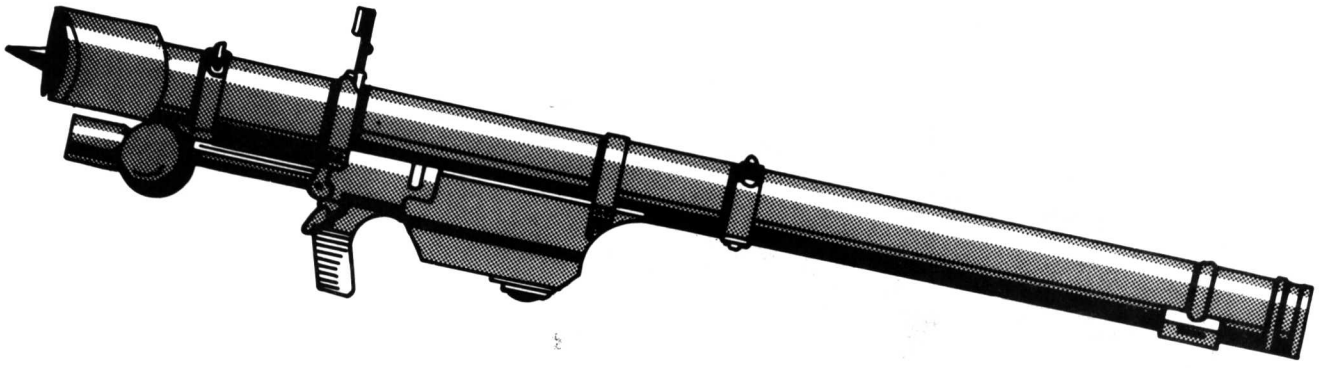

SA-27 Grappler

Missile	*Rng*	*Guidance*	*Acc. Level*
SA-27	6 km	Radar/IR	Easy

SA-27 Grappler: The SA-27 Grappler (its NATO designation) is the newest Russian, shoulder-fired antiaircraft missile. It uses advanced target acquisition and homing capabilities. This weapon is only available in **Merc: 2000** and **Dark Conspiracy** campaigns since the background does not permit its development in **Twilight: 2000**.

Missile Wt: 10.5 kg
Launcher Wt: 4.5 kg
Merc: 2000 *Missile Price:* $595 (—/R)
Merc: 2000 *Launcher Price:* $1750 (—/R)

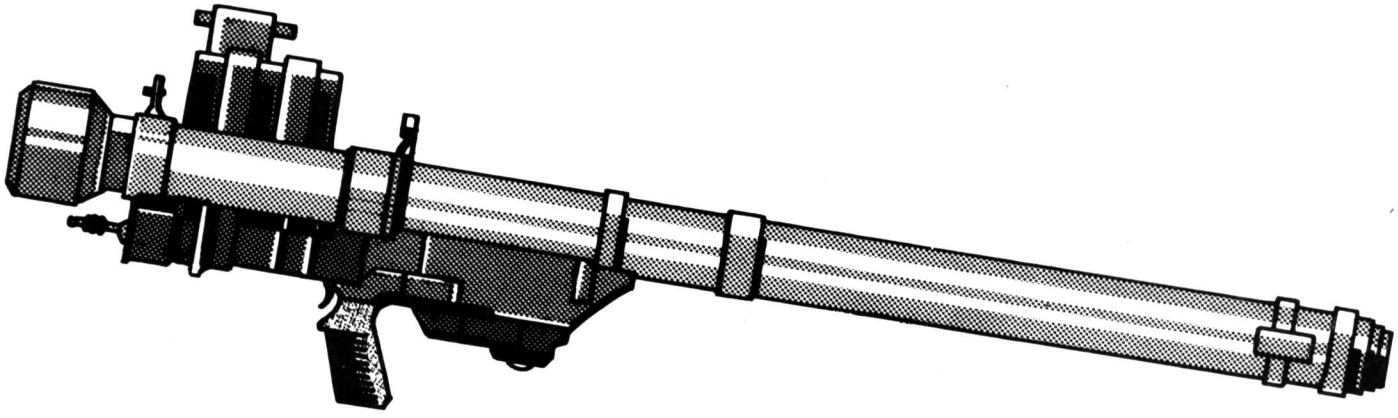

Starstreak

Missile	*Rng*	*Guidance*	*Acc. Level*
Starstreak	7 km	CMD	Easy

Starstreak: The Starstreak is the newest British, shoulder-fired antiaircraft missile, not yet in wide distribution. Starstreak is an HVM (high velocity missile) and depends largely upon kinetic energy to destroy its target. Another interesting facet of the missile is that it has a triple warhead, splitting it into three laser-homing submunitions shortly after firing.

Missile Wt: 12 kg
Launcher Wt: 6 kg
Twilight: 2000 *Missile Price:* $750 (—/—)
Merc: 2000 *Missile Price:* $595 (—/R)
Twilight: 2000 *Launcher Price:* $4500 (—/—)
Merc: 2000 *Launcher Price:* $1750 (—/R)

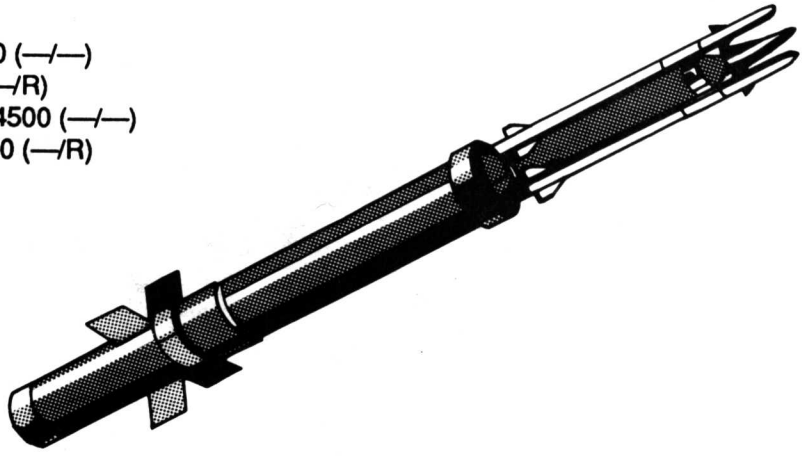

Towed Rapier

Missile	*Rng*	*Guidance*	*Acc. Level*
Towed Rapier	7 km	CMD	Average

Towed Rapier: This is the towed version of the Rapier quadruple antiaircraft missile launcher described in the **NATO Vehicle Handbook**. The Rapier is normally deployed with a battery target acquisition and tracking unit, separate from the launcher.

Missile Wt: 42.6 kg
Launcher Wt: 1.3 tons
Twilight: 2000 *Missile Price:* $20,000 (R/—)
Merc: 2000 *Missile Price:* $12,000 (—/R)
Twilight: 2000 *Launcher Price:* $60,000 (R/—)
Merc: 2000 *Launcher Price:* $25,000 (—/R)

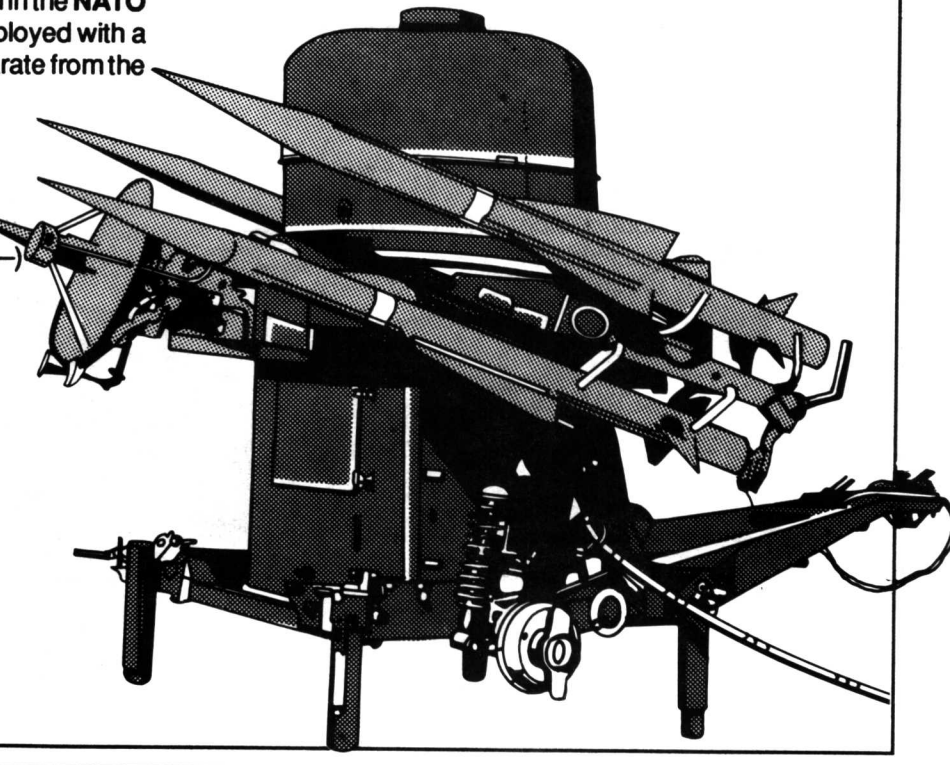

B-10 82mm RCL

Type	*ROF*	*Rld*	*Rng*	*Round*	*Damage*	*Pen*
B-10	1	2	600	HEAT	C:4, B:4	45C
				HE	C:4, B:20	1C

B-10 82mm RCL: The B-10 is an obsolete, Soviet, recoilless rifle, now manufactured only for export. It was replaced in Russian service by the SPG-9 73mm RCL and by antitank guided missiles.

Crew: 3
Round Wt (HEAT): 3.6 kg
Round Wt (HE): 4.5 kg
Weapon Wt: 72 kg
***Twilight: 2000** Round Price:* $550 (—/R)
***Merc: 2000** Round Price:* $300 (—/R)
***Twilight: 2000** Weapon Price:* $30,000 (—/R)
***Merc: 2000** Weapon Price:* $20,000 (—/R)

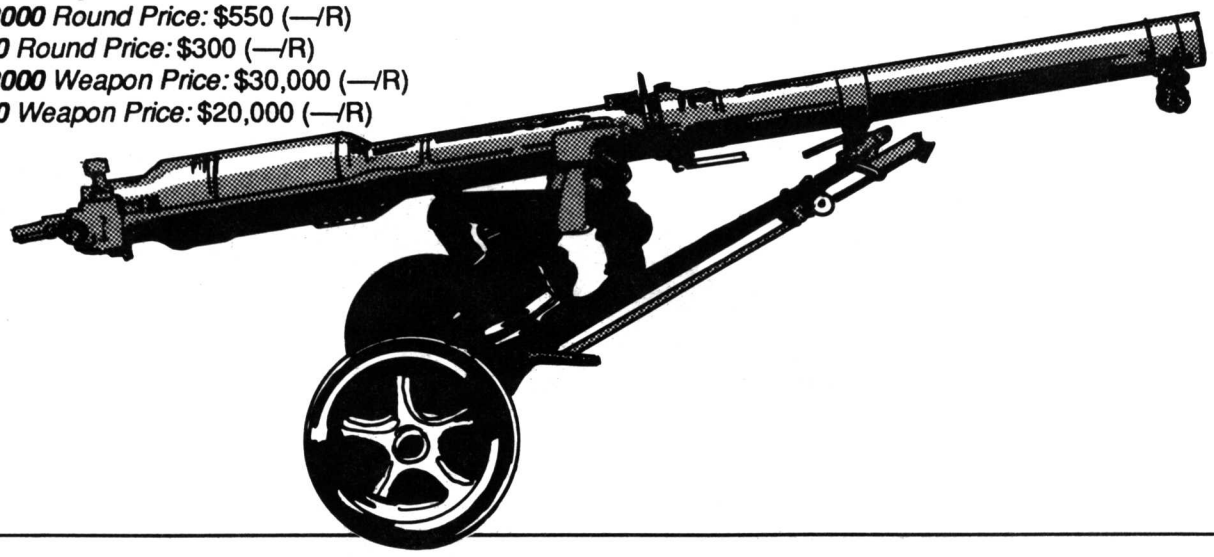

B-11 107mm RCL

Type	*ROF*	*Rld*	*Rng*	*Round*	*Damage*	*Pen*
B-11	1	2	800	HEAT	C:6, B:12	75C
				HE	C:6, B:16	4C

B-11 107mm RCL: This bulky and hard-to-handle weapon has largely been replaced in Russian service by antitank guided missiles. But it can still be found in second-line units and reserve units, and in the armies of other nations.

Crew: 4
Round Wt (HEAT): 7.5 kg
Round Wt (HE): 8.5 kg
Weapon Wt: 305 kg
***Twilight: 2000** Round Price:* $700 (—/S)
***Merc: 2000** Round Price:* $600 (—/R)
***Twilight: 2000** Weapon Price:* $50,000 (—/S)
***Merc: 2000** Weapon Price:* $45,000 (—/R)

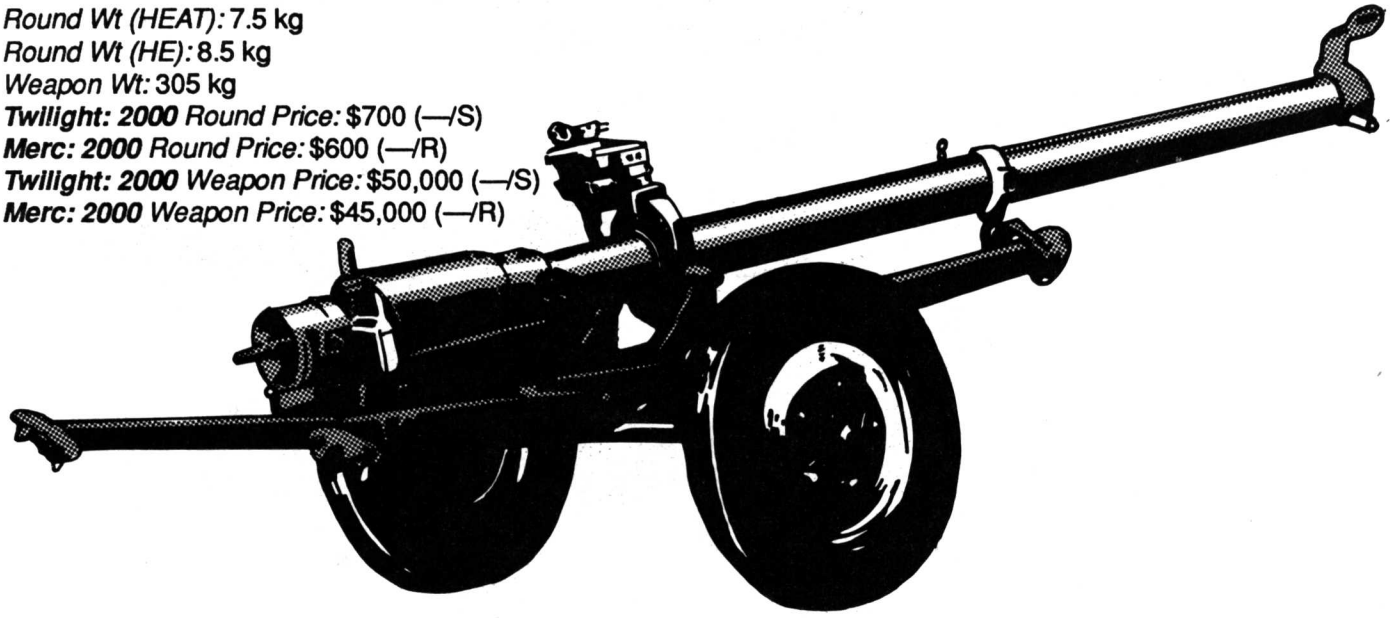

Folgore

Type	*ROF*	*Rld*	*Rng*	*Round*	*Damage*	*Pen*
Folgore	1	2	100	HEAT	C:4, B:4	70C

Folgore: This is a shoulder-fired, recoilless rifle of outstanding performance. It is the standard medium antitank weapon of the Italian Army, among others.

Crew: 2
Round Wt: 5 kg
Weapon Wt: 17 kg
Twilight: 2000 *Ammo Price:* $120 (C/S)
Merc: 2000 *Ammo Price:* $24 (—/S)
Twilight: 2000 *Weapon Price:* $1200 (C/S)
Merc: 2000 *Weapon Price:* $750 (—/S)

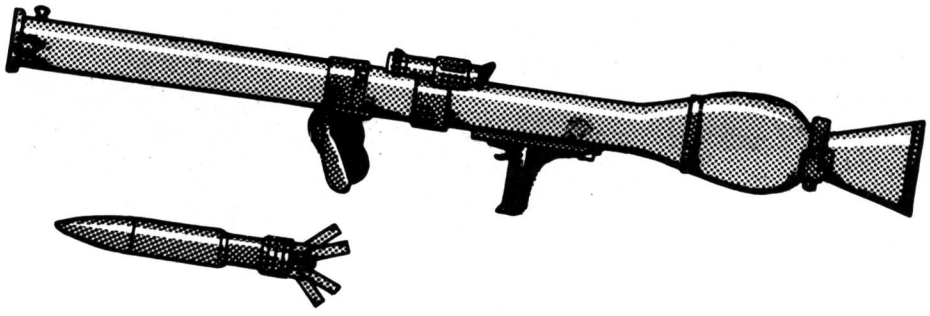

M3 Carl Gustav

Type	*ROF*	*Rld*	*Rng*	*Round*	*Damage*	*Pen*
M3	1	2	150	HEAT	C:4, B:4	70C

M3 Carl Gustav: This is a shoulder-fired, recoilless rifle used as the standard medium antitank and assault weapon by Germany, Britain, Canada, the Netherlands and other countries. It fires an 84mm HEAT round.

Ammo: 84mm HEAT
Crew: 2
Weapon Wt: 18 kg
Ammunition Wt: 3 kg
Twilight: 2000 *Ammo Price:* $120 (C/S)
Merc: 2000 *Ammo Price:* $32 (—/S)
Twilight: 2000 *Weapon Price:* $800 (C/S)
Merc: 2000 *Weapon Price:* $250 (—/C)

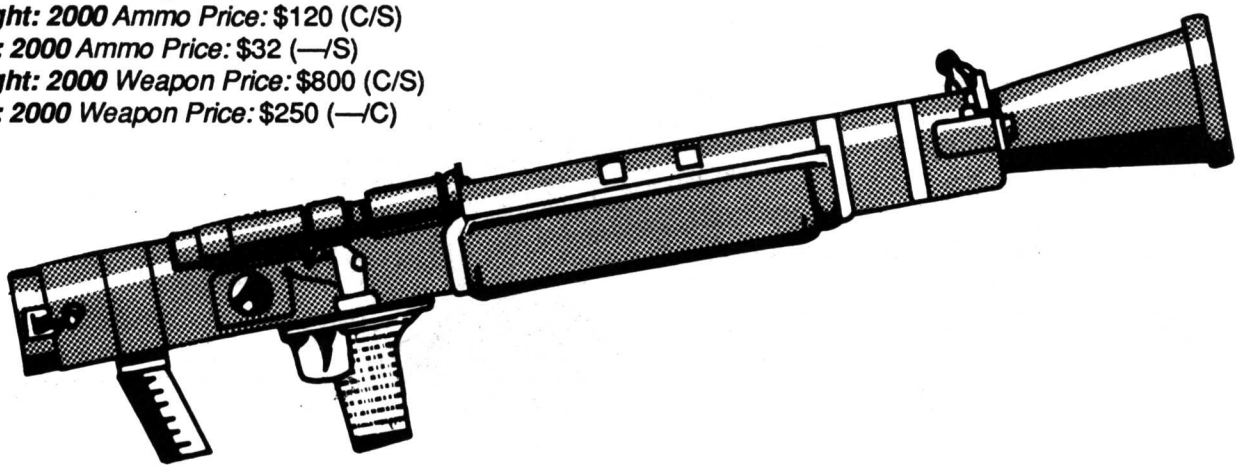

L-6 Wombat 120mm RCL

Type	*ROF*	*Rld*	*Rng*	*Round*	*Damage*	*Pen*
L-6	1	2	450	HE-P	C:10, B:20	100C

L-6 Wombat 120mm RCL: The British-built L-6 Wombat recoilless rifle is no longer in active service with the British Army, but it is still found in many armies throughout the world. The weapon is designed to be fired from a vehicle or tripod mount—it is too heavy for shoulder-firing.

Crew: 3
Round Wt: 28 kg
Weapon Wt: 230 kg
Twilight: 2000 *Round Price:* $700(R/—)
Merc: 2000 *Round Price:* $450 (—/R)
Twilight: 2000 *Weapon Price:* $60,000 (R/R)
Merc: 2000 *Weapon Price:* $42,000 (—/R)

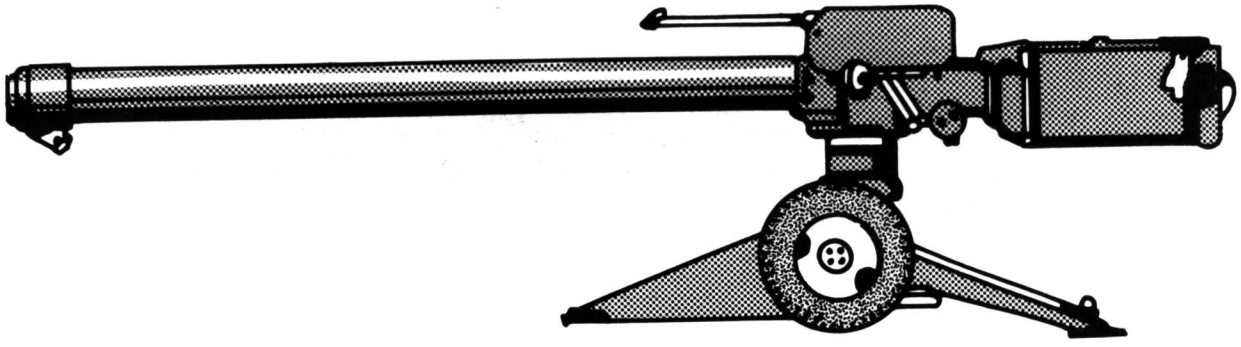

M-59A 82mm RCL

Type	*ROF*	*Rld*	*Rng*	*Round*	*Damage*	*Pen*
M-59A	1	2	600	HEAT	C:4, B:4	45C
				HE	C:4, B:20	1C

M-59A 82mm RCL: This is a Czech 82mm recoilless rifle designed to use the same rounds as the Russian B-10 and the Chinese Type 65.

Crew: 3
Round Wt (HEAT): 3.6 kg
Round Wt (HE): 4.5 kg
Weapon Wt: 72 kg
Twilight: 2000 *Round Price:* $550 (—/R)
Merc: 2000 *Round Price:* $300 (—/R)
Twilight: 2000 *Weapon Price:* $30,000 (—/R)
Merc: 2000 *Weapon Price:* $20,000 (—/R)

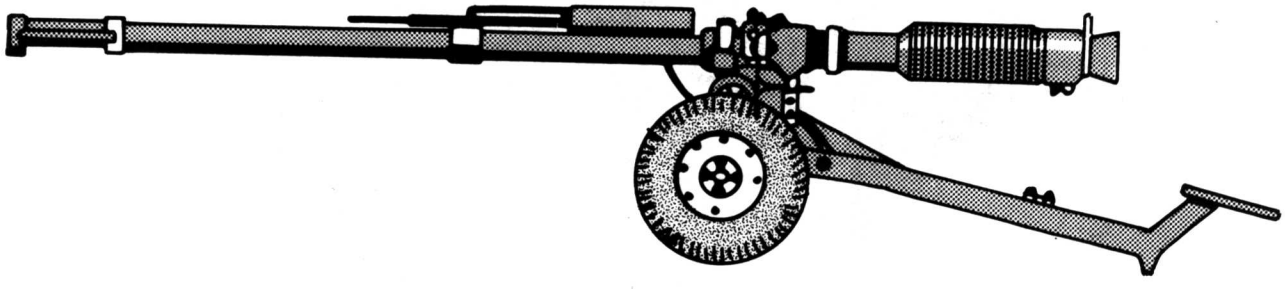

M18A1 57mm RCL

Type	ROF	Rld	Rng	Round	Damage	Pen
M18A1	1	2	125	HEAT	C:6, B:16	55C
				HE	C:6, B:24	2C
				WP	C:6, B:24	Nil

M18A1 57mm RCL: Developed in 1945 by the US Army, this weapon saw limited service in WWII and extensive service in the Korean War. It was replaced by antitank rocket launchers and ATGMs in the US Army but can still be found in the armies of other nations. It can be fired from the shoulder, from a tripod or (less commonly) from a vehicle mount.

Crew: 2
Round Wt: 1.3 kg
Weapon Wt: 21 kg
***Twilight: 2000** Round Price (All Types):* $75 (R/R)
***Merc: 2000** Round Price (All Types):* $55 (—/R)
***Twilight: 2000** Weapon Price:* $7500 (R/R)
***Merc: 2000** Weapon Price:* $5000 (—/R)

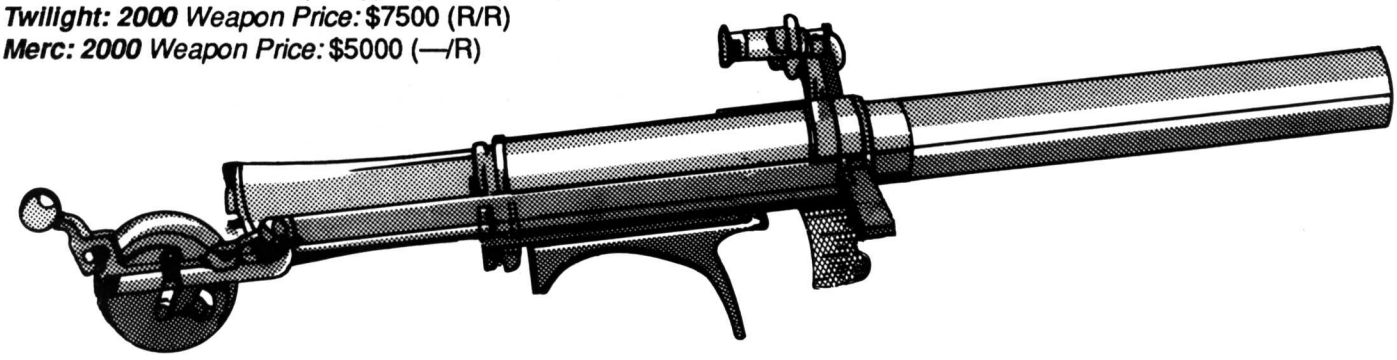

M20 75mm RCL

Type	ROF	Rld	Rng	Round	Damage	Pen
M20	1	2	300	HEAT	C:4, B:16	–1C
				HEPT	C:4, B:4	20C

M20 75mm RCL: This obsolete American recoilless rifle is still in use by some nations.

Crew: 3
Round Wt: 10 kg
Weapon Wt: 67 kg
***Twilight: 2000** Round Price (All Types):* $450 (S/—)
***Merc: 2000** Round Price (All Types):* $250 (—/S)
***Twilight: 2000** Weapon Price:* $18,000 (S/R)
***Merc: 2000** Weapon Price:* $612,000 (—/R)

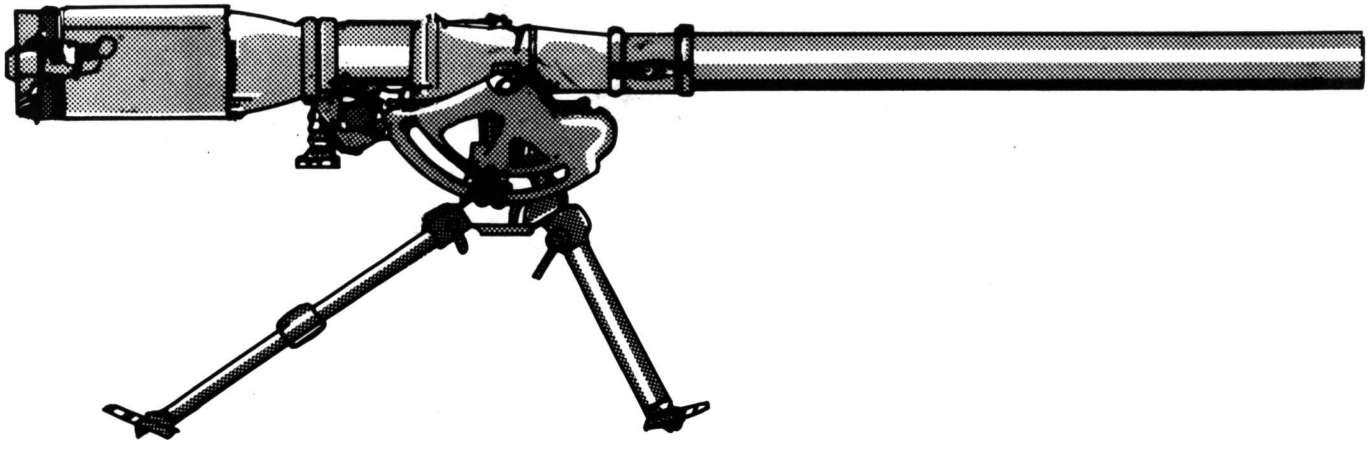

M27A1 105mm RCL

M27A1 105mm RCL: An obsolete US recoilless rifle, the M27A1 is now in use by numerous small armies and mercenary groups throughout the world. The weapon is normally carried on a vehicle but may be used with a tripod (NHT) if desired. This weapon is very similar to, but less popular than, the M40A1 106mm RCL because it is heavier and less easily transported.

Crew: 3
Weapon Wt: 187 kg (with tripod)
Round Wt: 16 kg
Twilight: 2000 *Weapon Price:* $15,000 (S/C)
Merc: 2000 *Weapon Price:* $12,000 (—/S)

HEAT
Twilight: 2000 *Round Price:* $275 (S/C)
Merc: 2000 *Round Price:* $220 (—/S)

HEPT
Twilight: 2000 *Round Price:* $450 (S/C)
Merc: 2000 *Round Price:* $300 (—/C)

Type	*ROF*	*Rld*	*Rng*	*Round*	*Damage*	*Pen*
M27A1	1	2	200	HEAT	C:6, B:12	80C
				HEPT	C:6, B:8	40C

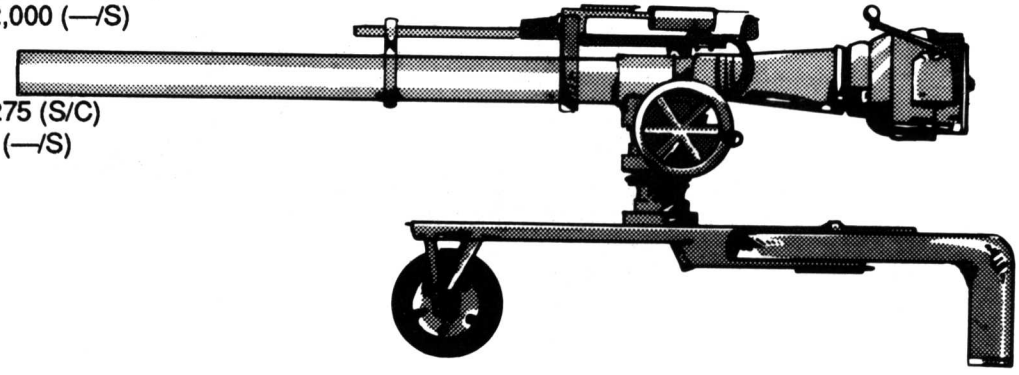

M40A1 106mm RCL

M40A1 106mm RCL: Another obsolete US recoilless rifle, the M40A1 is lighter than the M27A1, more readily transported, and has a longer range. The weapon can be fired either from a vehicle mount or from a tripod (NHT).

Crew: 3
Weapon Wt: 152 kg (with tripod)
Round Wt: 16 kg
Twilight: 2000 *Weapon Price:* $15,000 (S/C)
Merc: 2000 *Weapon Price:* $45,000 (—/S)

HEAT
Twilight: 2000 *Round Price:* $275 (S/C)
Merc: 2000 *Round Price:* $220 (—/S)

HEPT
Twilight: 2000 *Round Price:* $450 (S/C)
Merc: 2000 *Round Price:* $300 (—/C)

Type	*ROF*	*Rld*	*Rng*	*Round*	*Damage*	*Pen*
M40A1	1	2	300	HEAT	C:6, B:12	80C
				HEPT	C:6, B:8	40C

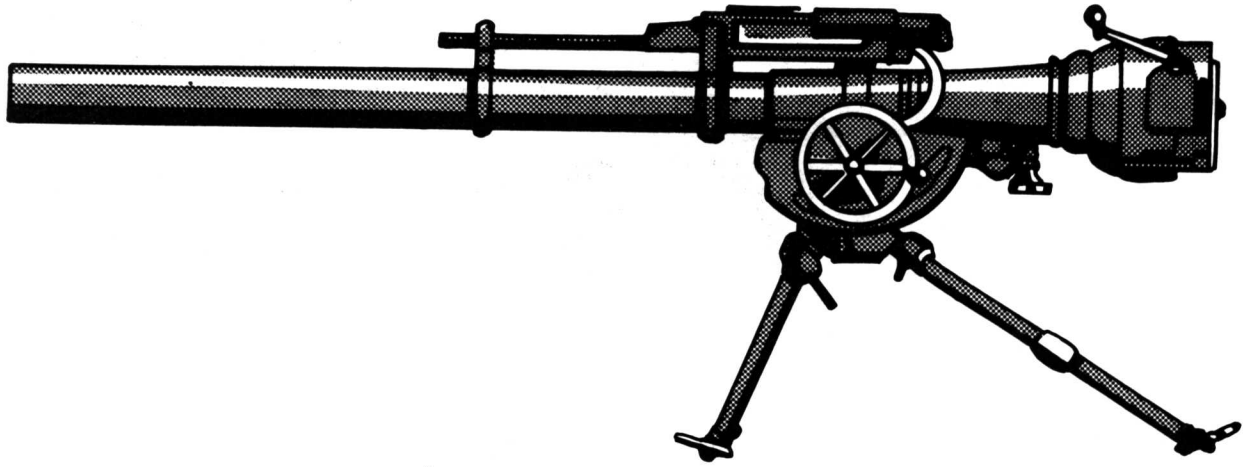

M67 90mm RCL

M67 90mm RCL: One of the last recoilless rifle models in American service, some M67s are still found in service with the National Guard and 82nd Airborne Division, and with numerous other armies. The M67 can be fired from the shoulder, from a vehicle or from a tripod mount (NHT).

Crew: 2
Weapon Wt: 38 kg
Round Wt: 4 kg
Twilight: 2000 *Weapon Price:* $20,000 (R/—)
Merc: 2000 *Weapon Price:* $12,000 (—/S)

HEAT
Twilight: 2000 *Round Price:* $475 (R/—)
Merc: 2000 *Round Price:* $375 (—/S)

HE
Twilight: 2000 *Round Price:* $450 (R/—)
Merc: 2000 *Round Price:* $350 (—/S)

APERS
Twilight: 2000 *Round Price:* $550 (R/—)
Merc: 2000 *Round Price:* $400 (—/R)

Type	*ROF*	*Rld*	*Rng*	*Round*	*Damage*	*Pen*
M67	1	1	100	HEAT	C:6, B:12	70C
				HE	C:4, B:16	4C
				APERS	C:4, B: 24	4C

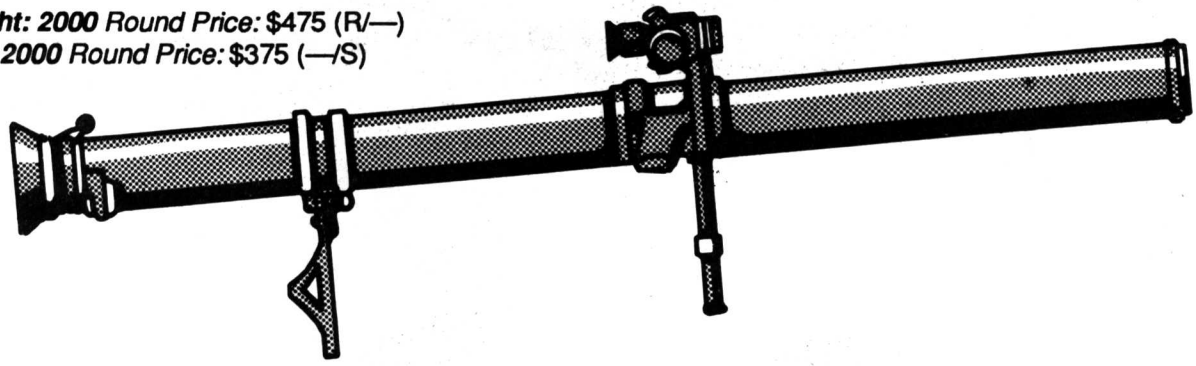

SPG-9 73mm RCL

SPG-9 73mm RCL: The SPG-9 is a tripod-mounted weapon similar to the 73mm gun mounted in the turret of the BMP and BMP APCs. However, the SPG-9 differs in its propelling charge. The 73mm rounds fired from the SPG-9 are kicked out of the launcher by a small propelling charge. Then, about 20 meters down-range, a rocket propellant kicks in and boosts the round the rest of the way to the target.

Crew: 2
Weapon Wt: 68 kg
Twilight: 2000 *Weapon Price:* $35,000 (R/C)
Merc: 2000 *Weapon Price:* $25,000 (—/S)

HEAT
Round Wt: 3.6 kg
Twilight: 2000 *Round Price:* $500 (—/R)
Merc: 2000 *Round Price:* $250 (—/S)

HE
Round Wt: 4.5 kg
Twilight: 2000 *Round Price:* $550 (—/R)
Merc: 2000 *Round Price:* $300 (—/S)

Type	*ROF*	*Rld*	*Rng*	*Round*	*Damage*	*Pen*
SPG-9	1	2	200	HEAT	C:6, B:16	75C
				HE	C:6, B:24	4C

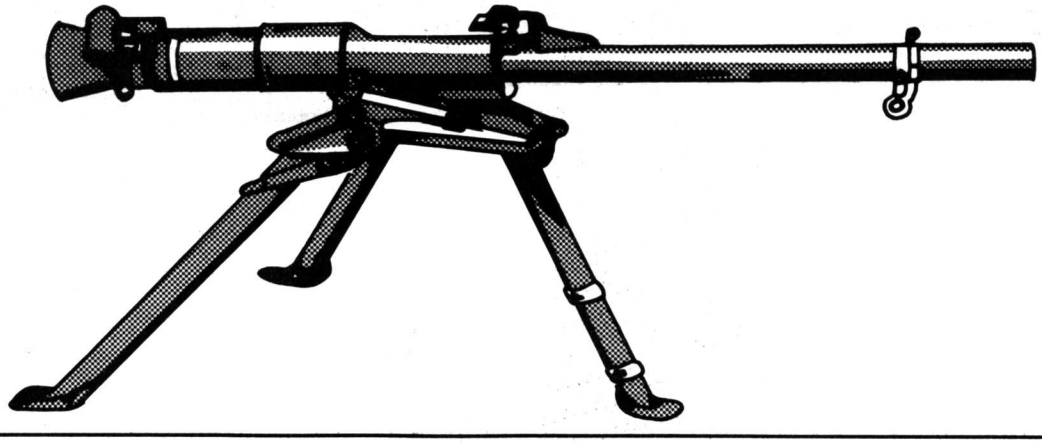

Type 36 RCL

Type	*ROF*	*Rld*	*Rng*	*Round*	*Damage*	*Pen*
Type 36	1	2	125	HEAT	C:6, B:16	55C
				HE	C:6, B:24	2C
				WP	C:6, B:24	Nil

Type 36 RCL: Manufactured in China, this weapon is a copy of the US M18A1 57mm recoilless rifle.

Crew: 2
Round Wt: 1.3 kg
Weapon Wt: 21 kg
Twilight: 2000 *Round Price (All Types):* $65 (—/S)
Merc: 2000 *Round Price (All Types):* $45 (—/R)
Twilight: 2000 *Weapon Price:* $7000 (—/S)
Merc: 2000 *Weapon Price:* $4500 (—/R)

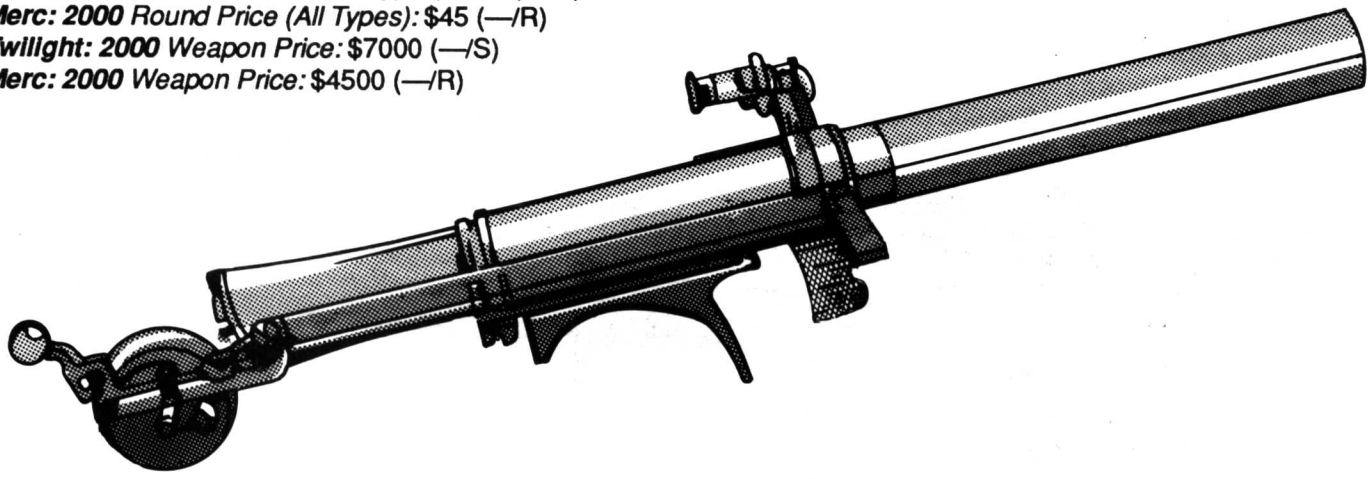

Type 56 RCL

Type	*ROF*	*Rld*	*Rng*	*Round*	*Damage*	*Pen*
Type 56	1	2	300	HEAT	C:4, B:16	–1C

Type 56 RCL: The Type 56 is an unlicensed copy of the US M20 75mm recoilless rifle, manufactured by various Chinese warlords and first encountered by the People's Army in Korea in the early 1950s. It can also fire the M20 75mm RCL's HEPT rounds.

Crew: 3
Round Wt: 10 kg
Weapon Wt: 67 kg
Twilight: 2000 *Round Price:* $400 (—/S)
Merc: 2000 *Round Price:* $220 (—/S)
Twilight: 2000 *Weapon Price:* $16,000 (—/R)
Merc: 2000 *Weapon Price:* $550,000 (—/R)

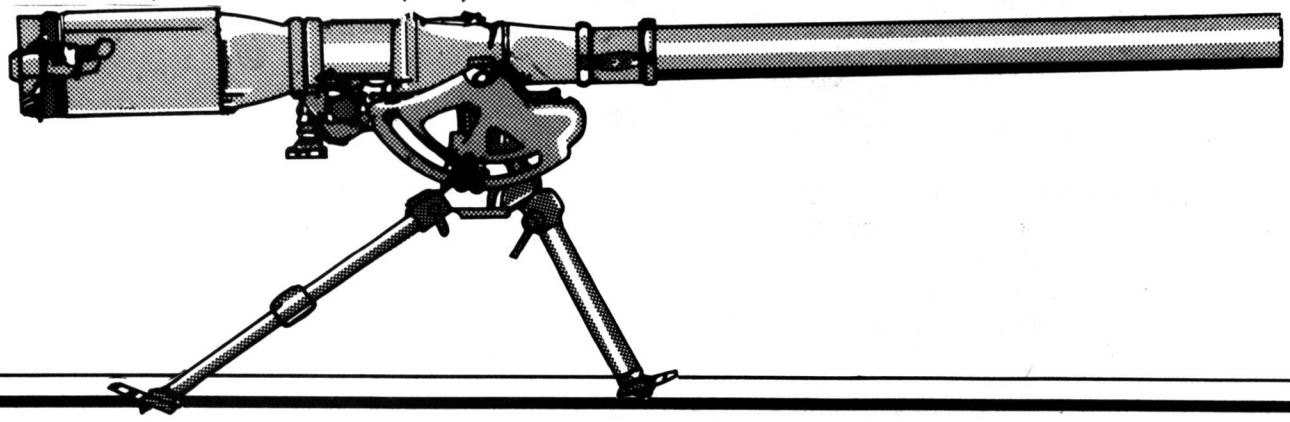

Type 65 RCL

Type	*ROF*	*Rld*	*Rng*	*Round*	*Damage*	*Pen*
Type 65	1	2	600	HEAT	C:4, B:4	45C
				HE	C:4, B:20	1C

Type 65 RCL: This is a Chinese-manufactured version of the Soviet B-10 82mm recoilless rifle.

Crew: 3
Round Wt (HEAT): 3.6 kg
Round Wt (HE): 4.5 kg
Weapon Wt: 72 kg
***Twilight: 2000** Round Price:* $550 (—/R)
***Merc: 2000** Round Price:* $300 (—/R)
***Twilight: 2000** Weapon Price:* $30,000 (—/R)
***Merc: 2000** Weapon Price:* $20,000 (—/R)

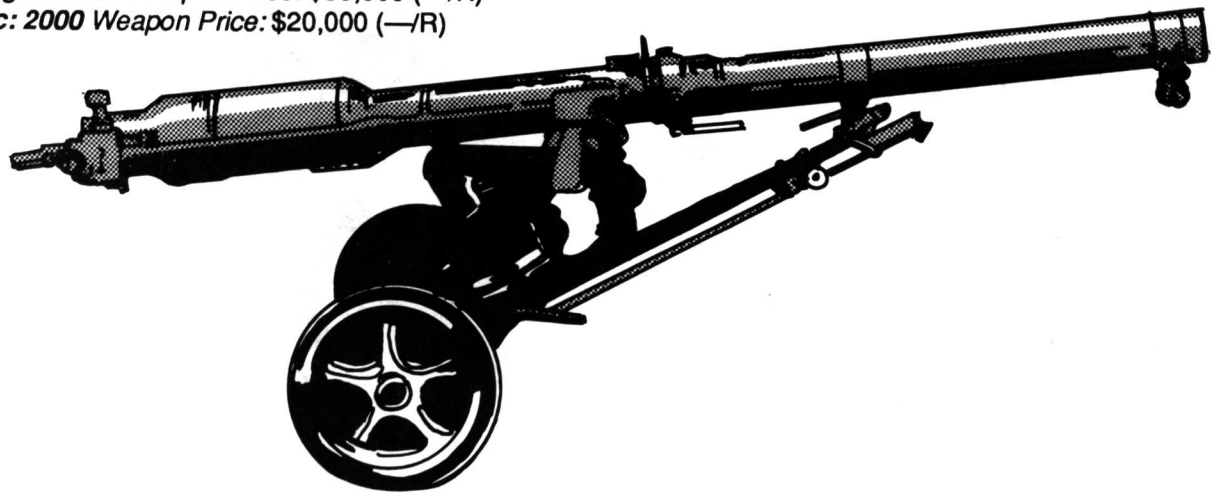

AM2 B9 Vasilek 82mm Automatic Mortar

AM2 B9 Vasilek 82mm Automatic Mortar: Standard medium mortar for the Warsaw Pact, the Vasilek is a clip-fed automatic mortar. It is mounted on a wheeled carriage to allow it to be towed behind a vehicle. The mortar is usually fired from its carriage, like a small field gun, and requires 12 combat turns to set up. The Vasilek is listed here because it is labeled a mortar, but its characteristics have caused the designers to classify it as an autocannon for the purposes of the firing system (note that, unlike other mortars, it has direct-fire characteristics as well as indirect-fire ones).

Crew: 3
Round Wt (All Types): 50 kg per five-round clip
Weapon Wt: 80 kg (carriage weighs 50 kg)
Ammo: 82mm mortar
Mag: 5
***Twilight: 2000** Weapon Price:* $20,000 (R/S)
***Merc: 2000** Weapon Price:* $12,000 (—/S)

HE
***Twilight: 2000** Round Price:* $300 per clip (S/C)
***Merc: 2000** Round Price:* $60 per clip (—/S)

HEDP
***Twilight: 2000** Round Price:* $600 per clip (R/S)
***Merc: 2000** Round Price:* $65 per clip (—/R)

WP
***Twilight: 2000** Round Price:* $300 per clip (R/S)
***Merc: 2000** Round Price:* $75 per clip (—/R)

ILLUM
***Twilight: 2000** Round Price:* $150 per clip (R/S)
***Merc: 2000** Round Price:* $70 per clip (—/R)

Weapon	*ROF*	*Mag*	*Rng*	*Ammo*	*Damage*	*Pen*
AM2 B9	5	5	200	HE	C:8, B:28	–4C
IFR: 3 km			200	HEDP	C:7, B:20	15C
			200	WP	C:2, B:20	Nil
			—	ILLUM	B:1000	Nil

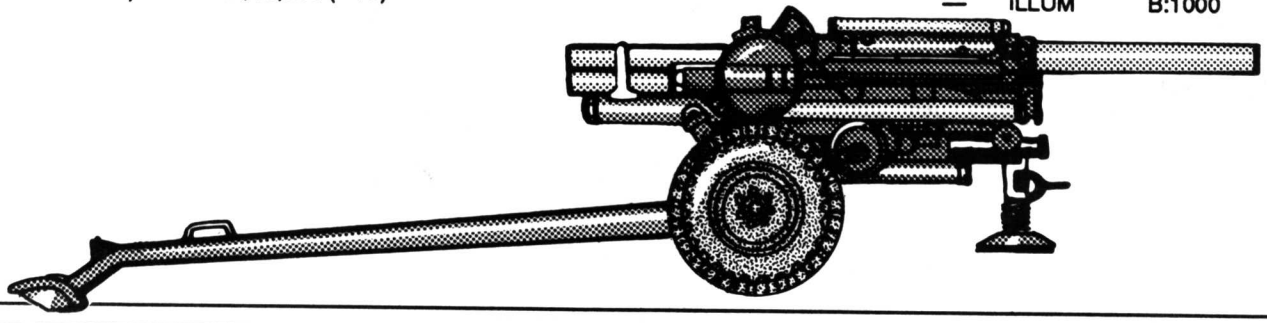

L5 81mm Mortar

Type	*Round*	*Damage*	*Pen*
L5 81mm	HE	C:8, B:28	–4C
IFR: 4.5 km	WP	C:2, B:20	Nil
	ILLUM	B:1000	Nil

L5 81mm Mortar: The standard mortar for the Canadian Army, gradually being replaced by a 60mm mortar similar to the US M224.

Crew: 3
Wt: 40 kg (bipod, 15 kg; baseplate, 10 kg; tube, 15 kg)
Ammo Wt (All Types): 25 kg per case of three
Twilight: 2000 *Weapon Price:* $10,000 (C/S)
Merc: 2000 *Weapon Price:* $8000 (—/R)

HE
Twilight: 2000 *Round Price:* $150 per case (C/S)
Merc: 2000 *Round Price:* $36 per case (—/C)

WP
Twilight: 2000 *Round Price:* $300 per case (S/R)
Merc: 2000 *Round Price:* $48 per case (—/S)

ILLUM
Twilight: 2000 *Round Price:* $150 per case (S/R)
Merc: 2000 *Round Price:* $45 (—/S)

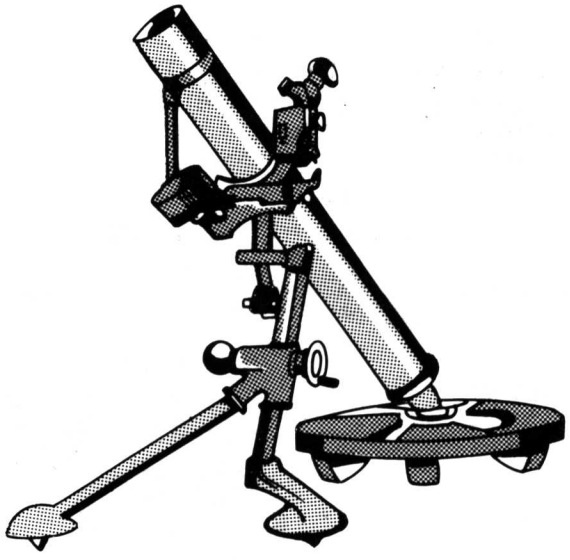

L16A2 81mm Mortar

Type	*Round*	*Damage*	*Pen*
L16A2	HE	C:8, B:28	–4C
IFR: 4.5 km	WP	C:2, B:20	Nil
	ILLUM	B:1000	Nil

L16A2 81mm Mortar: This is the standard medium mortar for the British Army.

Crew: 3
Wt: 40 kg (bipod, 15 kg; baseplate, 10 kg; tube, 15 kg)
Ammo Wt (All Types): 25 kg per case of three
Twilight: 2000 *Weapon Price:* $10,000 (C/S)
Merc: 2000 *Weapon Price:* $8000 (—/V)

HE
Twilight: 2000 *Round Price:* $150 per case (C/S)
Merc: 2000 *Round Price:* $36 per case (—/C)

WP
Twilight: 2000 *Round Price:* $300 per case (S/R)
Merc: 2000 *Round Price:* $48 per case (—/S)

ILLUM
Twilight: 2000 *Round Price:* $150 per case (S/R)
Merc: 2000 *Round Price:* $45 (—/S)

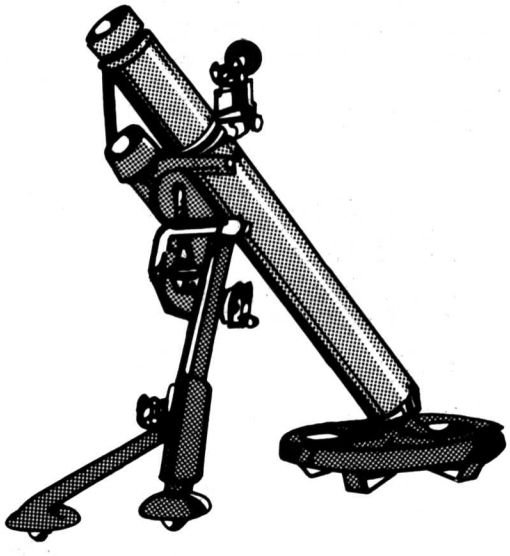

M-1937 82mm Mortar

M-1937 82mm Mortar: The M-1937 was the standard Soviet light mortar during WWII. With improved sights, it continues in service with dozens of armies today (although other types have replaced it in Russian service).

Crew: 3

Round Wt (All Types): 50 kg per case of five

Twilight: 2000 *Weapon Price:* $ 8000 (R/C)

Merc: 2000 *Weapon Price:* $ 6000 (—/S)

HE

Twilight: 2000 *Round Price:* $300 per case (S/C)

Merc: 2000 *Round Price:* $60 per case (—/S)

WP

Twilight: 2000 *Round Price:* $300 per case (R/S)

Merc: 2000 *Round Price:* $75 per case (—/R)

ILLUM

Twilight: 2000 *Round Price:* $150 per case (R/S)

Merc: 2000 *Round Price:* $70 per case (—/R)

Type	*Round*	*Damage*	*Pen*
M-1937	HE	C:8, B:28	–4C
IFR: 4 km	WP	C:2, B:20	Nil
	ILLUM	B:1000	Nil



M-1943 120mm Mortar

M-1943 120mm Mortar: Standard heavy mortar for the Warsaw Pact and most western European armies. It can be disassembled into three loads (bipod, baseplate, tube) for easier transportation. A wheeled carriage is also provided to allow the assembled weapon to be towed behind a vehicle. The mortar may not be fired from its carriage. Individual rounds are dropped down the tube by the loader. It requires 12 combat turns to set up. This weapon is produced in China as the Type 55 120mm mortar.

Crew: 4

Weapon Wt: 520 kg (bipod, 70 kg; baseplate, 90 kg; tube, 120 kg; wheeled carriage, 240 kg)

Round Wt (All Types): 50 kg per case of two

Twilight: 2000 *Price:* $15,000 (C/C)

Merc: 2000 *Price:* $12,000 (—/S)

HE

Twilight: 2000 *Round Price:* $200 per case (C/C)

Merc: 2000 *Round Price:* $72 per case (—/S)

WP

Twilight: 2000 *Round Price:* $400 per case (R/R)

Merc: 2000 *Round Price:* $80 per case (—/R)

CHEM

Twilight: 2000 *Round Price:* $250 per case (S/S)

Merc: 2000 *Round Price:* $85 per case (—/R)

ILLUM

Twilight: 2000 *Round Price:* $200 per case (R/R)

Merc: 2000 *Round Price:* $85 per case (—/R)

Type	*Round*	*Damage*	*Pen*
M-1943	HE	C:16, B:44	0C
IFR: 6 km	WP	C:3, B:36	Nil
	ILLUM	B:1500	Nil
	CHEM	C:3, B:12	Nil

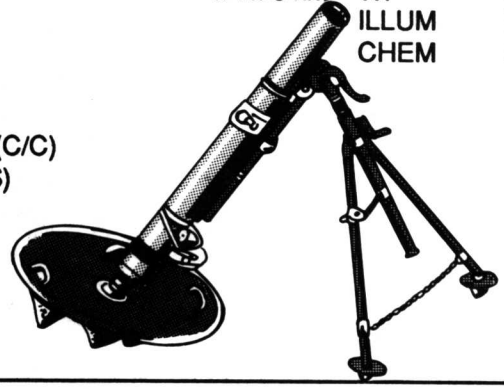

M-1952 240mm Mortar

Type	*Round*	*Damage*	*Pen*
M-1952	HE	C:40, B:48	–4C
IFR: 9.7 km			

M-1952 240mm Mortar: The M-1952 is the largest mortar in the Soviet inventory (or in anyone else's inventory, for that matter). It is so large and cumbersome that it is used only in front-level heavy mortar battalions (something the Soviets don't have many of by 2000). Originally developed for urban fighting, the M-1952 is breech-loaded, fired by a trigger rather than by the conventional "muzzle-drop" method used in most mortars. Only HE rounds are available.

Crew: 8
Round Wt: 130 kg each
Weapon Wt: 3.6 tons
Twilight: 2000 *Round Price:* $4000 (—/R)
Merc: 2000 *Round Price:* $2000 (—/R)
Twilight: 2000 *Weapon Price:* $45,000 (—/R)
Merc: 2000 *Weapon Price:* $35,000 (—/R)

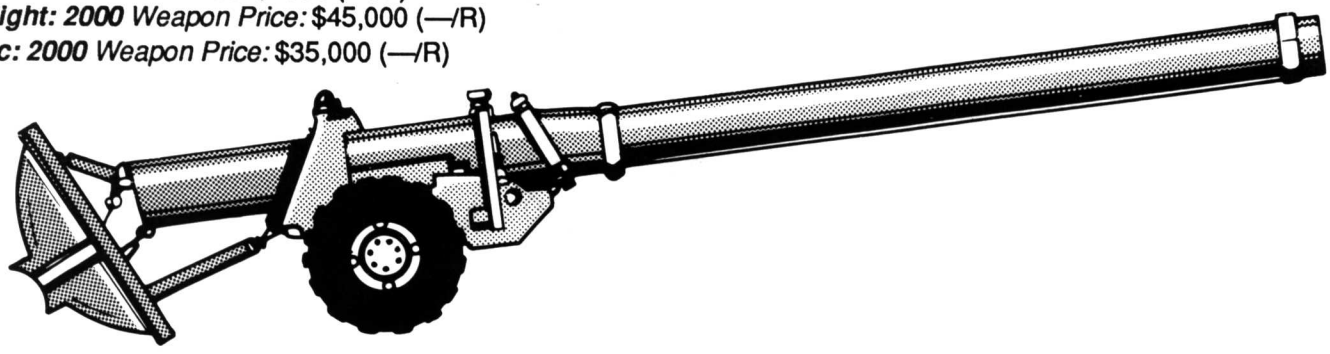

M-1953 160mm Mortar

Type	*Round*	*Damage*	*Pen*
M-1953	HE	C:26, B: 40	–4C
IFR: 8 km	CHEM	C:4, B:18	Nil

M-1953 160mm Mortar: Like the M-1952, the M-1953 is too large for active service and is quite rare. The M-1953 can be breech-loaded or fired conventionally. Only HE and chemical smoke rounds (HC) are available. This weapon is produced in China as the Type 56 160mm mortar.

Crew: 6
Round Wt (All Types): 50 kg each
Weapon Wt: 3.6 tons
Twilight: 2000 *Round Price:* $120 (—/R)
Merc: 2000 *Round Price:* $180 (—/R)
Twilight: 2000 *Weapon Price:* $30,000 (—/R)
Merc: 2000 *Weapon Price:* $25,000 (—/R)

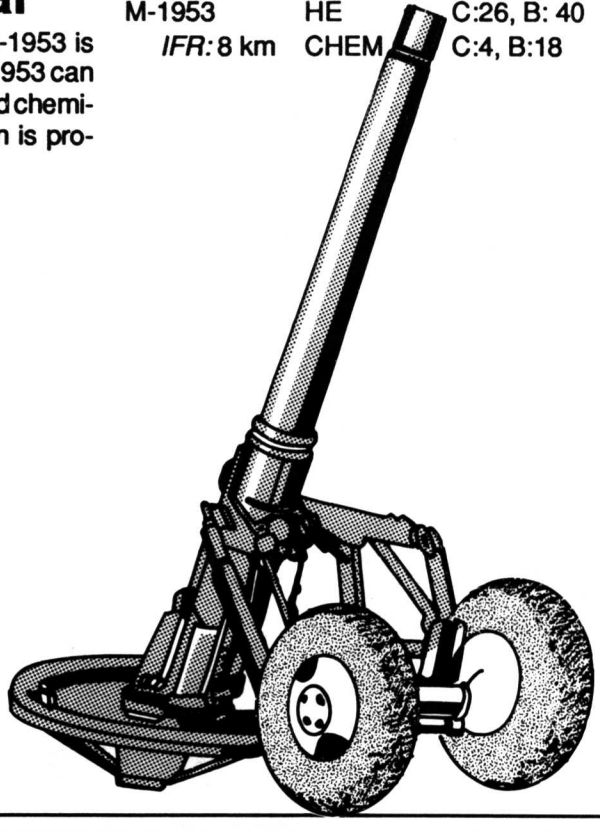

M29E1 81mm Mortar

M29E1 81mm Mortar: The M29E1 was the standard light mortar with the US Army until it was replaced by the lighter 60mm designs in the mid-1980s.

Crew: 3
Round Wt (All Types): 25 kg per case of three
Wt: 40 kg (bipod, 15 kg; baseplate, 10 kg; tube, 15 kg)
***Twilight: 2000** Weapon Price:* $10,000 (C/S)
***Merc: 2000** Weapon Price:* $8000 (—/S)

HE
***Twilight: 2000** Round Price:* $150 per case (C/S)
***Merc: 2000** Round Price:* $36 per case (—/C)

WP
***Twilight: 2000** Round Price:* $300 per case (S/R)
***Merc: 2000** Round Price:* $48 per case (—/S)

ILLUM
***Twilight: 2000** Round Price:* $150 per case (S/R)
***Merc: 2000** Round Price:* $45 (—/S)

Type	*Round*	*Damage*	*Pen*
M29E1	HE	C:8, B:28	–4C
IFR: 4.5 km	WP	C:2, B:20	Nil
	ILLUM	B:1000	Nil

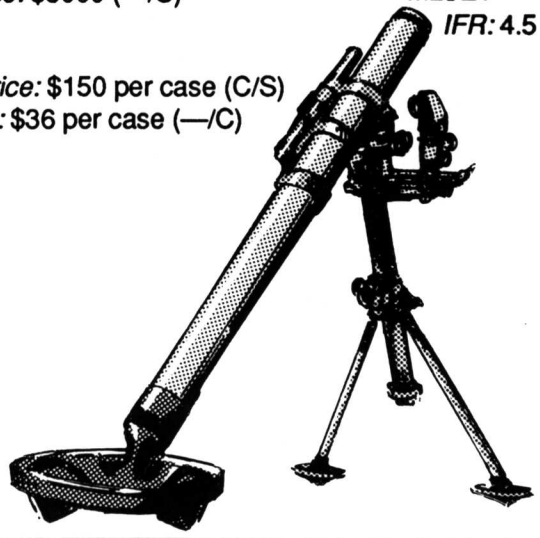

M30 4.2" (107mm) Mortar

M30 4.2"(107mm) Mortar: This is the standard heavy mortar for the US Army. It can be disassembled into three loads (monopod, baseplate, tube) for easier transportation. Individual rounds are dropped down the tube by the loader. The M30 requires 12 combat turns to set up.

Crew: 4
Round Wt: 35 kg per case of two
Weapon Wt: 300 kg (monopod, 80 kg; baseplate, 100 kg; tube, 120 kg)
***Twilight: 2000** Weapon Price:* $12,000 (C/S)
***Merc: 2000** Weapon Price:* $10,000 (—/S)

HE
***Twilight: 2000** Price:* $200 per case (C/S)
***Merc: 2000** Price:* $48 per case (—/S)

ICMDP
***Twilight: 2000** Price:* $2000 per case (R/R)
***Merc: 2000** Price:* $600 per case (—/R)

WP, CHEM and ILLUM
***Twilight: 2000** Price:* $200 per case (S/R)
***Merc: 2000** Price:* $55 per case (—/S)

Type	*Round*	*Damage*	*Pen*
M30 4.2"	HE	C:12, B:36	–2C
IFR: 6 km	WP	C:3, B:36	Nil
	ILLUM	B:1500	Nil
	ICMDP	B:36	Grenade*
	CHEM	C:3, B:12	Nil

***ICM Attack Data**

Round	*Close*	*Adj.*	*Conc*	*Burst*	*Pen*
4.2" ICMDP	1-2	2	3	12	4C

The 4.2" mortar is nicknamed the "Four-Deuce" in the US Army. The mortar was developed in WWII to hurl chemical rounds (primarily smoke), but was soon used as a heavy bombardment weapon.

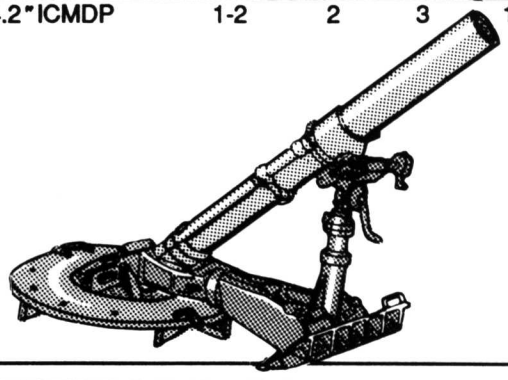

M224 60mm Mortar

M224 60mm Mortar: The standard light mortar for the US Army, the M224 can be disassembled into three loads (bipod, baseplate, tube) for easier transportation. Individual rounds are dropped down the tube by the loader. It requires two combat turns to set up.

Crew: 3
Weapon Wt: 20 kg (bipod, 8 kg; baseplate, 4 kg; tube, 8 kg)
Round Wt (All Types): 25 kg per case of 12
Twilight: 2000 *Weapon Price:* $5000 (C/S)
Merc: 2000 *Weapon Price:* $6500 (—/V)

HE
Twilight: 2000 *Price:* $150 per case (C/S)
Merc: 2000 *Price:* $72 per case (—/C)

WP
Twilight: 2000 *Price:* $600 per case (S/R)
Merc: 2000 *Price:* $75 per case (—/S)

ILLUM
Twilight: 2000 *Price:* $300 per case (S/R)
Merc: 2000 *Price:* $75 per case (—/S)

Type	*Round*	*Damage*	*Pen*
M224	HE	C:5, B:20	Nil
IFR: 4 km	WP	C:2, B:12	Nil
	ILLUM	B:400	Nil

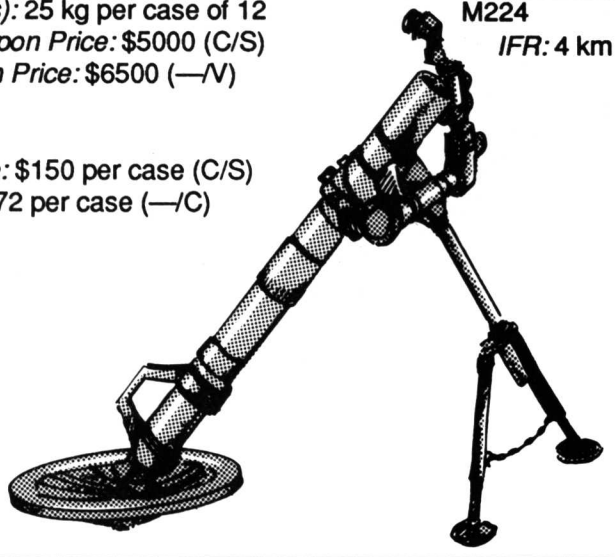

Merlin

Merlin: Merlin is a British-built, 81mm, antitank mortar round with internal targeting electronics. It is fired in conventional fashion. The weapon's guidance system activates at the top of the trajectory, and its IR seeker begins scanning an area 320 meters square. When a target is located, the fins on the round guide the trajectory of the bomb toward the target. For game purposes, treat the Merlin as if it were a wire-guided missile, except that the round itself counts as the firer (and has a default Heavy Weapons skill of 5). The weapon can be fired from any 81mm or 82mm mortar (except the AM2 B9 Vasilek) at any 320-meter-square area (40 eight-meter squares) within range. (If more than one target is in the square, the referee chooses one at random. If none are in the area, the round self-destructs on impact with the ground.) Merlin is an overhead-attack weapon like Tank Breaker.

Wt: 6 kg
Twilight: 2000 *Price:* $7000 (—/—)
Merc: 2000 *Price:* $3600 (—/R)

Type	*Rld*	*Max. Rng*	*Damage*	*Pen*
Merlin	2	4500	C:5, B:5	20C

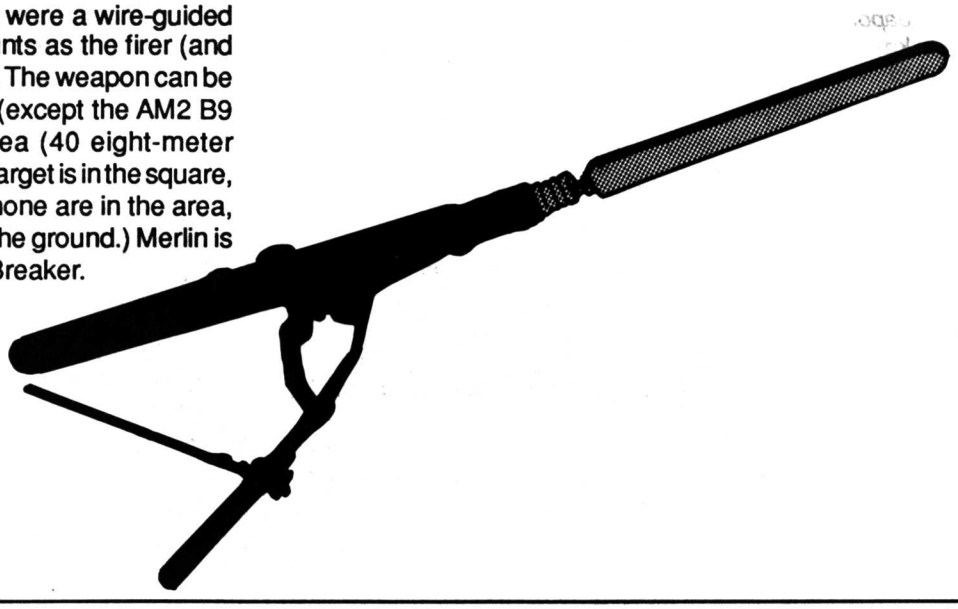

Strix

Type	Rld	Max. Rng	Damage	Pen
Strix	2	6500	C:8, B:8	90C

Strix: Strix is a Swedish, IR-guided, antitank mortar round designed for use in 120mm mortars. It is fired in conventional fashion. The weapon's guidance system activates at the top of the trajectory, and its IR seeker begins scanning an area 320 meters square searching for targets. When a target is located, the fins on the round guide the trajectory of the bomb towards the target.

For game purposes, treat the Strix as if it were a wire-guided missile, except that the round itself counts as the firer (and has a default Heavy Weapons skill of 5).

The weapon can be fired from any 120mm mortar at any 320-meter-square area (40 eight-meter squares) within range. (If more than one target is in the square, the referee chooses one at random. If none are in the area, the round self-destructs on impact with the ground.)

Strix is an overhead attack weapon like Tank Breaker.

Wt: 24 kg
Twilight: 2000 *Price:* $20,000 (—/—)
Merc: 2000 *Price:* $12,000 (—/R)

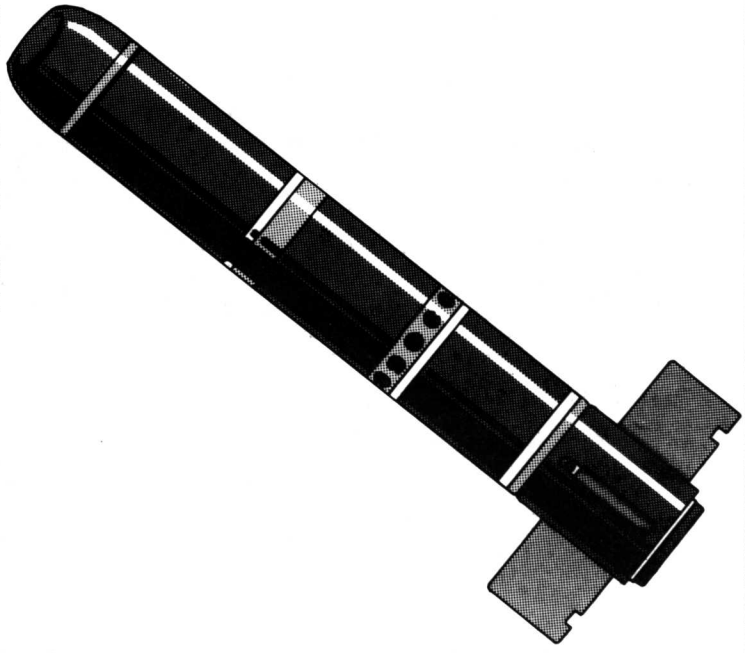

Thompson-Brandt 120mm Mortar

Thompson-Brandt 120mm Mortar: This is a French-built, heavy mortar in service with many armies throughout the world. Like most other heavy mortars, it comes with a wheeled carriage and is usually towed behind a light truck or APC.

Crew: 4

Wt: 520 kg (bipod, 70 kg; baseplate, 90 kg; tube, 120 kg; wheeled carriage, 240 kg)

Round Wt (All Types): 50 kg per case of two
Twilight: 2000 *Price:* $15,000 (C/C)
Merc: 2000 *Price:* $12,000 (—/S)

HE
Twilight: 2000 *Round Price:* $200 per case (C/C)
Merc: 2000 *Round Price:* $72 per case (—/S)

WP
Twilight: 2000 *Round Price:* $400 per case (R/R)
Merc: 2000 *Round Price:* $80 per case (—/R)

CHEM
Twilight: 2000 *Round Price:* $250 per case (S/S)
Merc: 2000 *Round Price:* $85 per case (—/R)

ILLUM
Twilight: 2000 *Round Price:* $200 per case (R/R)
Merc: 2000 *Round Price:* $85 per case (—/R)

Type	Round	Damage	Pen
120mm	HE	C:16, B:44	0C
IFR: 6 km	WP	C:3, B:36	Nil
	ILLUM	B:1500	Nil
	CHEM	C:3, B:12	Nil

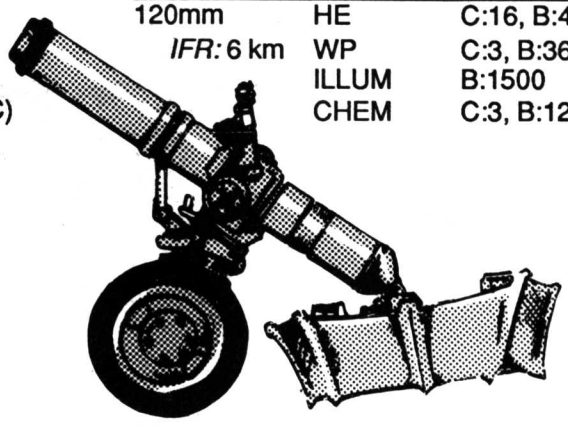

Wojo Combo Mortar

Wojo Combo Mortar: Produced by the Wojchiechowiecz armaments factory in Krakow, the Wojo combination mortar will fire either 81 or 82mm rounds, and comes with a number of wooden sabots to enable it to use 60mm rounds. When the weapon is firing 60mm rounds, indirect fire range is reduced by 10%, but all other factors remain the same. The Wojo Combo is typical of a number of mortars built by small, hand-work factories in the world of **Twilight: 2000**. Wojo products are unavailable in **Merc: 2000** or other games.

Crew: 2-3
Wt: 40 kg
Twilight: 2000 *Price:* $8000 (C/C)

Type	*Round*	*Damage*	*Pen*
60mm	HE	C:5, B:20	Nil
IFR: 4 km	WP	C:2, B:12	Nil
	ILLUM	B:400	Nil
81mm	HE	C:8, B:28	–4C
IFR: 4 km	WP	C:2, B:20	Nil
	ILLUM	B:1000	Nil
82mm	HE	C:8, B:28	–4C
IFR: 4 km	WP	C:2, B:20	Nil
	ILLUM	B:1000	Nil

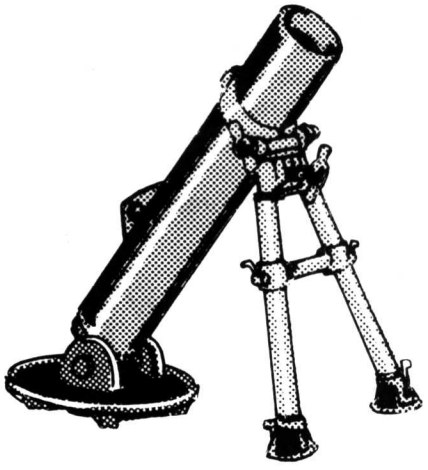

KhF-2 Chemical Mine

KhF-2 Chemical Mine: This is a Soviet-built, contact-triggered mine containing a 4.5-kilogram chemical charge, usually a blister agent (mustard gas or lewisite). The mine requires the pressure of 20 kilograms or more for detonation of the bursting charge, which scatters the contents over the burst radius in one five-second combat phase. These mines are not commonly encountered. One person may emplace this mine in five minutes and conceal it in an additional five minutes.

Wt: 15 kg
Twilight: 2000 *Price:* $1400 (—/R)
Merc: 2000 *Price:* $800 (—/—)

Type	*Damage*	*Pen*
KhF-2	C: 4, B: 20	Nil

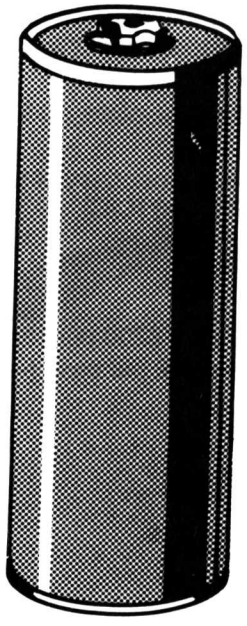

M14 APERS Mine

Type	*Damage*	*Pen*
M14	C:8, B:16	Fragments

M14 APERS Mine: The M14 is a small antipersonnel mine designed to detonate on contact, any pressure being sufficient to trigger it. Fragmentation damage and penetration are as noted on page 197 of **Twilight: 2000**. One person may emplace this mine in five minutes and conceal it in an additional five minutes.

Wt: 3 kg
***Twilight: 2000** Price:* $75 (S/R)
***Merc: 2000** Price:* $65 (—/S)

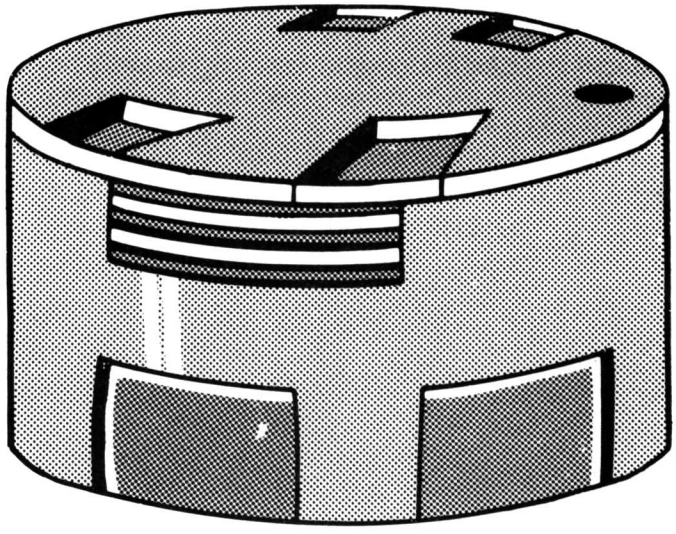

M15 Heavy AT Mine

Type	*Damage*	*Pen*
M15	C:22, B:22	30C

M15 Heavy AT Mine: This mine is designed to blow the tracks off armored vehicles. It requires the pressure of 150 kilograms or more for detonation (although it has a port on the side to accept a standard blasting cap for command detonation using the engineer's demolition kit). One person may emplace this mine in five minutes and conceal it in an additional five minutes.

Wt: 14 kg each, 30 kg per case of two
***Twilight: 2000** Price:* $1000 each, $2100 per case (R/—)
***Merc: 2000** Price:* $650, $1100 per case (—/S)

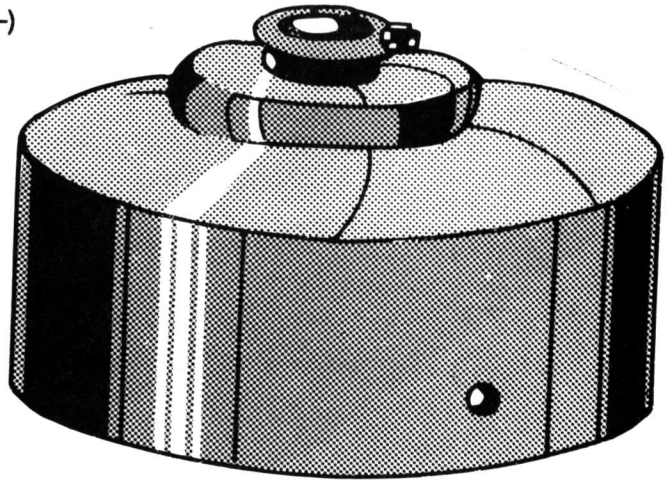

M16A1 APERS Mine

Type	*Damage*	*Pen*
M16A1	C:8, B:32	Fragments

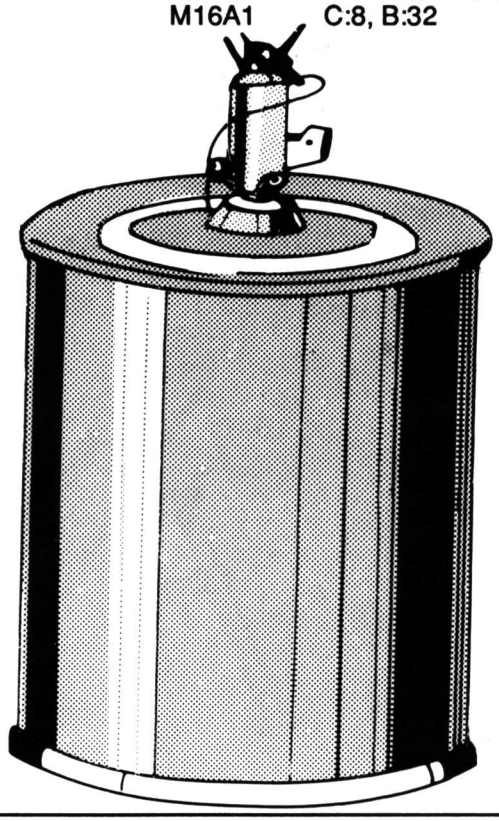

M16A1 APERS Mine: This is a bounding APERS mine, which means that when triggered, it bounds into the air about a meter before exploding, directing most of its fragments horizontally. Fragmentation damage and penetration is as noted on page 197 of **Twilight: 2000**. The M16A1 requires the pressure of 20 kg or more to trigger it, although some are rigged with more sensitive detonators such as tripwires (if rigged with a tripwire, it can be of any length desired, and any contact is sufficient to trigger the mine). One person may emplace this mine in five minutes and conceal it in an additional five minutes.

Wt: 4 kg, 18 kg per case of four
Twilight: 2000 *Price:* $80 each, $300 per case (S/R)
Merc: 2000 *Price:* $110 each, $375 per case (—/C)

M18A1 APERS Claymore Mine

Type	*Damage*	*Pen*
M18A1	Special	Fragments



M18A1 APERS Claymore Mine: This is a directional antipersonnel mine and is discussed in some detail in **Twilight: 2000**. Each mine comes in a canvas carrying case containing the mine, detonator, 30 meters of wire and a small blasting machine (usable only with the M18A1). Burst radius, fragmentation damage and penetration are as noted on page 197 of **Twilight: 2000**. One person may emplace this mine in three minutes and conceal it in an additional three minutes.

Wt: 2 kg each, 14 kg per case of six
Twilight: 2000 *Price:* $250 each, $800 per case (S/R)
Merc: 2000 *Price:* $240 each, $1200 per case (—/C)

M19 Plastic Heavy AT Mine

Type	*Damage*	*Pen*
M19 AT	C:22, B:22	30C

M19 Plastic Heavy AT Mine: The M19 is a large antitank and antivehicle mine with a plastic case to make it "invisible" to magnetic mine detectors. The only metal part of the mine is the firing pin. The explosive is in the form of a shaped charge, directed upward. It requires the weight of 150 kilograms or more to trigger. One person may emplace this mine in five minutes and conceal it in an additional five minutes.

Wt: 12 kg
***Twilight: 2000** Price:* $120 (R/—)
***Merc: 2000** Price:* $180 (—/R)

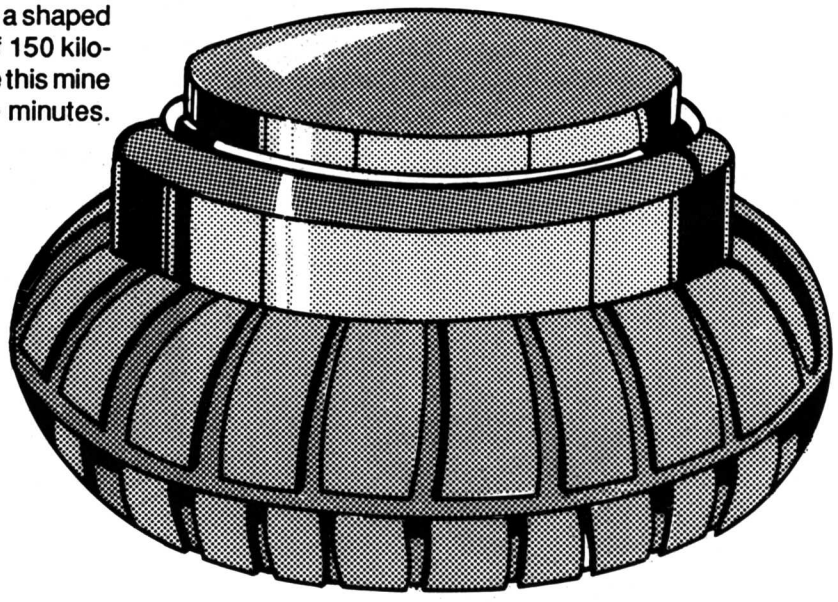

M21 Metallic AT Mine

Type	*Damage*	*Pen*
M21 AT	C:18, B:18	24C

M21 Metallic AT Mine: This mine is one of the older types with a metal case, often found in service with smaller armies which cannot obtain better. It requires 150 kilograms of pressure for detonation. One person may emplace this mine in five minutes and conceal it in an additional five minutes.

Wt: 8 kg
***Twilight: 2000** Price:* $100 (S/R)
***Merc: 2000** Price:* $125 (—/S)

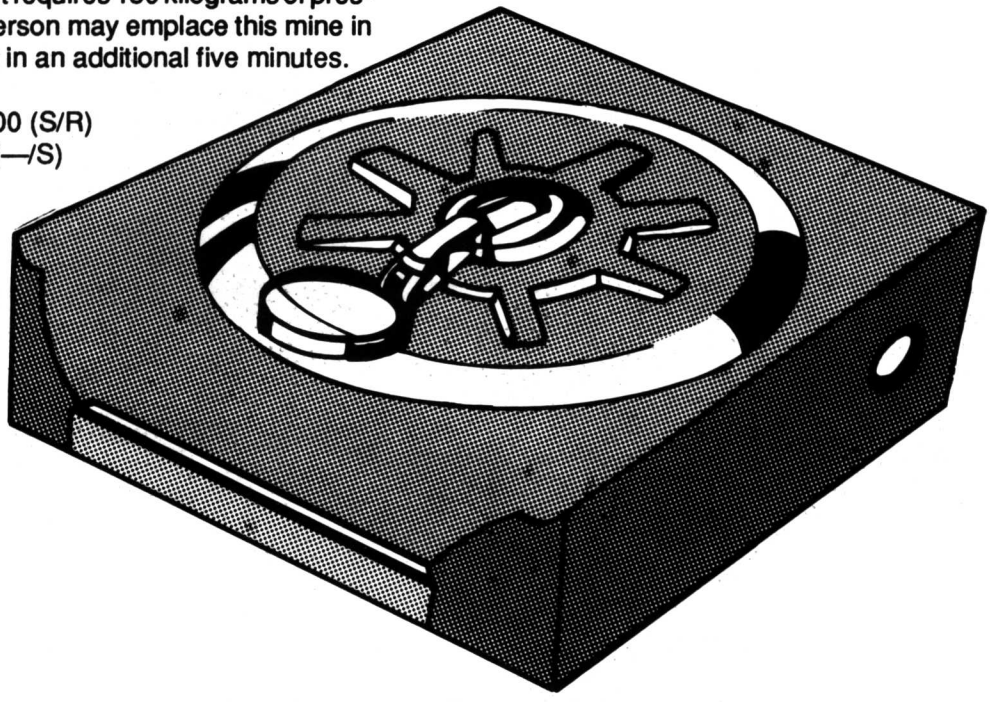

M23 Chemical Mine

Type	*Damage*	*Pen*
M23 Chem	C: 4, B: 20	Nil

M23 Chemical Mine: This is an American-built mine containing a five-kilogram chemical charge (any of the chemical agents described in the rules are possible). The mine requires the pressure of 20 kilograms or more for detonation of the bursting charge, which scatters the contents over the burst radius in one five-second combat phase. These mines are not commonly encountered. One person may emplace this mine in five minutes and conceal it in an additional five minutes.

Wt: 12 kg
Twilight: 2000 *Price:* $1600 (R/—)
Merc: 2000 *Price:* $1800 (—/—)

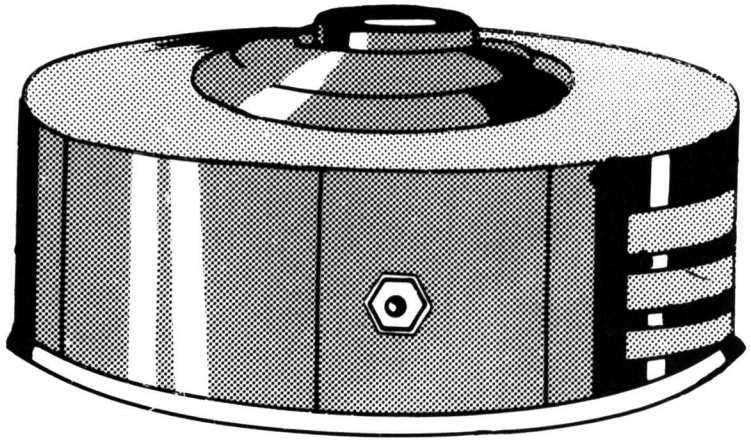

M24 Off-Route AT Mine

Type	*Damage*	*Pen*
M24 AT	C:6, B:4	90C

M24 Off-Route AT Mine: This mine fires a shaped charge against the side of any vehicle which rolls over a three-meter wide pneumatic detonator (similar to the bell tube at a gas station). Or the mine can be set off from a remote position up to 30 meters away. The charge hits the suspension on a 1D10 roll of 1-6, hits the HS on 7-9, and misses completely on 10. One person may emplace this mine in five minutes and conceal it in an additional five minutes.

Wt: 8 kg
Twilight: 2000 *Price:* $1000 (R/—)
Merc: 2000 *Price:* $1200 (—/R)

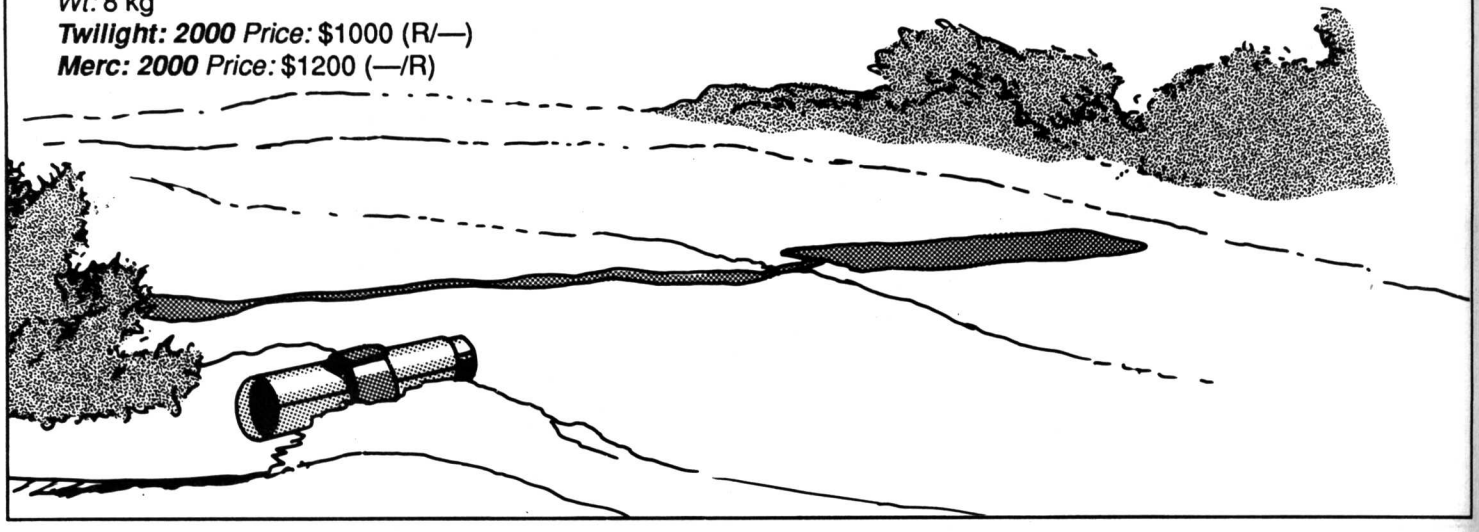

M25 APERS Mine

Type	*Damage*	*Pen*
M25 APERS	Special	Fragments

M25 APERS Mine: This is a shaped charge mine designed to direct its energy straight up when detonated. Any contact is sufficient to detonate the mine. Due to the special characteristics of this mine, only the limb which detonates the mine takes damage from 1D6 fragments, as described on page 197 of **Twilight: 2000**. No other locations or other individuals take damage. One person may emplace this mine in one minute and conceal it in an additional two minutes.

Wt: 0.1 kg, 16 kg per case of 150

Twilight: 2000 *Price:* $20 each, $2700 per case (S/R)

Merc: 2000 *Price:* $25 each, $2800 per case (—/R)

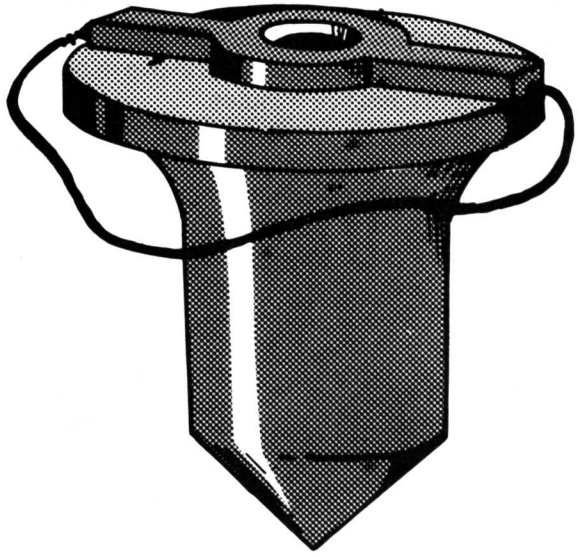

M26 APERS Mine

Type	*Damage*	*Pen*
M26 APERS	C:3, B:12	Fragments

M26 APERS Mine: The M26 is another bounding antipersonnel mine like the M16A1, but is smaller. When triggered, the mine bounds into the air before exploding, throwing most of its fragments horizontally. Any pressure is sufficient to trigger the mine. Fragmentation damage and penetration are as noted on page 197 of **Twilight: 2000**. One person may emplace this mine in five minutes and conceal it in an additional five minutes.

Wt: 1 kg

Twilight: 2000 *Price:* $80 (S/R)

Merc: 2000 *Price:* $90 (—/S)

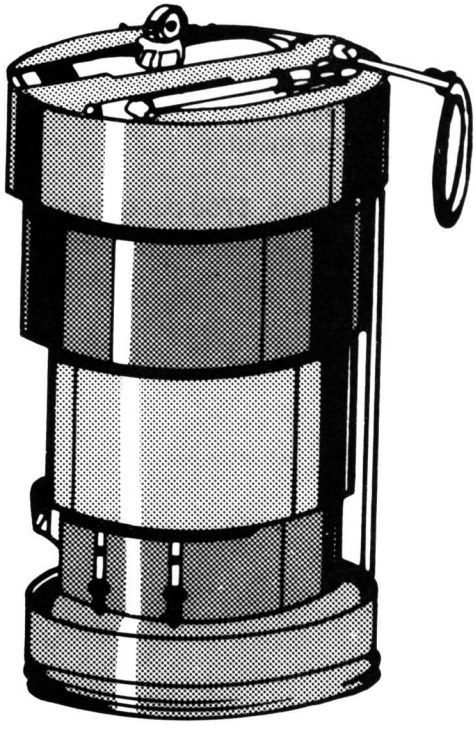

M66 Off-Route AT Mine

Type	*Damage*	*Pen*
M26 AT	C:6, B:4	90C

M66 Off-Route AT Mine: This mine fires a shaped charge against the side of any vehicle which breaks an infrared beam (similar to the door-opener at some supermarkets). Or it can be set off from a remote position up to 30 meters away. The charge hits the suspension on a 1D10 roll of 1-6, hits the HS on 7-9, and misses completely on 10. This mine requires seven minutes to emplace and synchronize. One person may emplace (but not synchronize) this mine in five minutes and conceal it in an additional five minutes.

Wt: 8 kg

Twilight: 2000 *Price:* $1200 (R/—)

Merc: 2000 *Price:* $1500 (—/R)

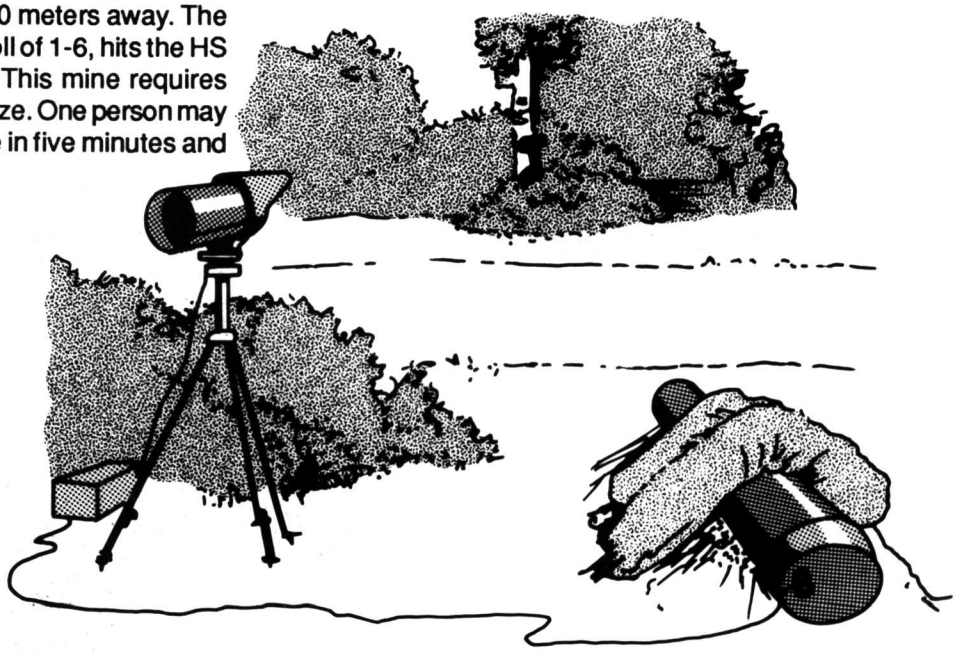

MON-50 APERS Mine

Type	*Damage*	*Pen*
MON-50	Special	Fragments

MON-50 APERS Mine: This mine is a Soviet copy of the M18A1 directional antipersonnel mine, whose effects are described in **Twilight: 2000**. Fragmentation damage and penetration are as noted on page 197 of **Twilight: 2000**. One person may emplace this mine in three minutes and conceal it in an additional three minutes.

Wt: 2 kg

Twilight: 2000 *Price:* $220 each, $750 per case (—/S)

Merc: 2000 *Price:* $230 each, $1000 per case (—/C)

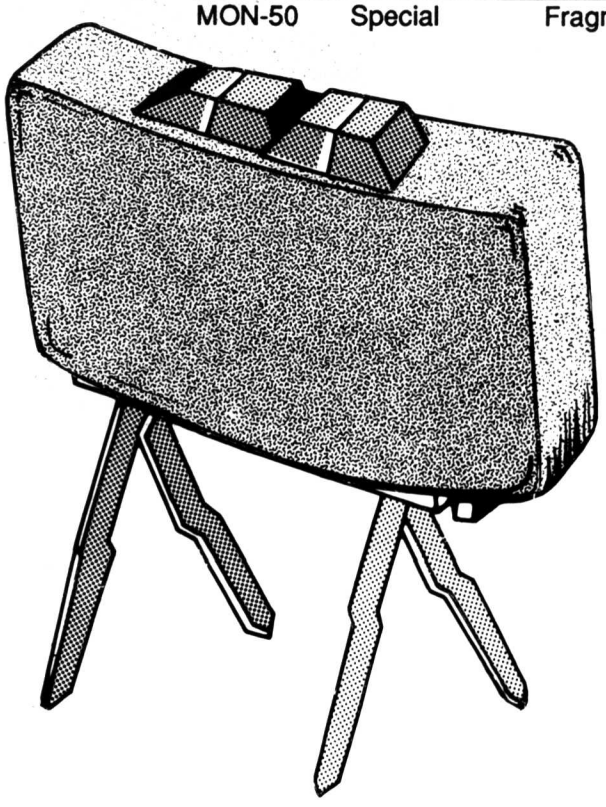

PM APERS Mine

Type	*Damage*	*Pen*
PM APERS	Special	Fragments

PM APERS Mine: The PM is a Soviet antipersonnel mine, designed to be small and easily concealed. Any contact is sufficient to trigger the shaped charge, designed to project most of its fragments straight up. Due to the special characteristics of this mine, only the limb which detonates the mine takes damage from 1D6 fragments, as described on page 197 of **Twilight: 2000**. No other locations or other individuals take damage. One person may emplace this mine in five minutes and conceal it in an additional five minutes.

Wt: 2 kg
Twilight: 2000 *Price:* $25 (R/S)
Merc: 2000 *Price:* $35 (—/S)

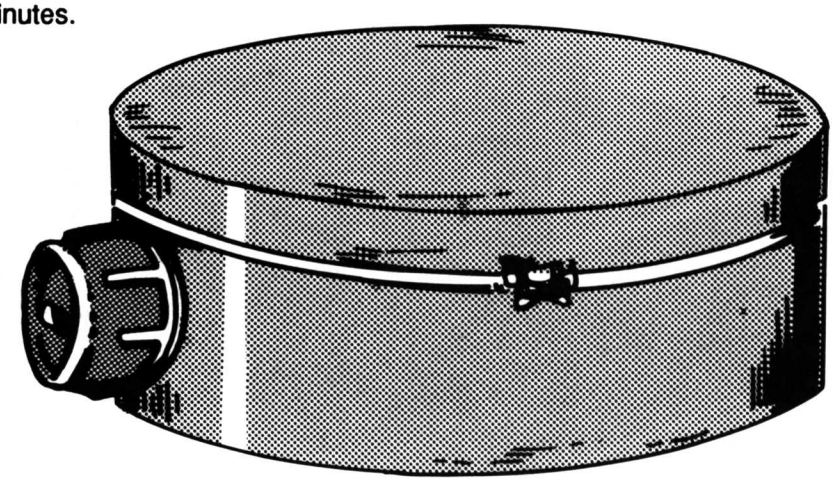

POMZ-2 APERS Mine

Type	*Damage*	*Pen*
POMZ-2	C:2, B:4	Fragments

POMZ-2 APERS Mine: This is a stake mine, which means that the mine can be emplaced quickly but protrudes from the surface of the ground (it can be concealed by draping it carefully with foliage, etc.). The mine is detonated by a tripwire, which can be any length desired. Any contact with the tripwire triggers the mine. One person may emplace this mine in two minutes and conceal it in an additional three minutes.

Wt: 2 kg
Twilight: 2000 *Price:* $200 (—/S)
Merc: 2000 *Price:* $250 (—/S)

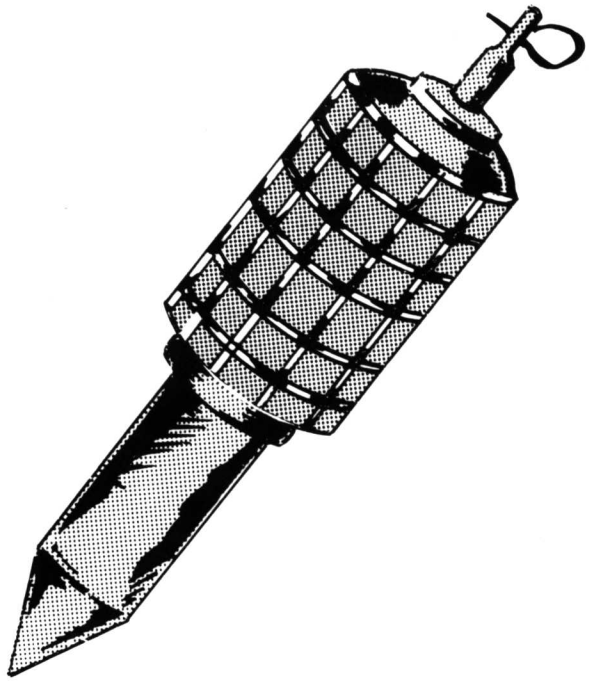

TM-46 AT Mine

Type	*Damage*	*Pen*
TM-46 AT	C:16, B:40	24C

TM-46 AT Mine: The TM-46 is a conventional, steel-case antitank mine requiring 180 kilograms or more for detonation. One person may emplace this mine in five minutes and conceal it in an additional five minutes.

Wt: 8.7 kg
Twilight: 2000 *Price:* $225 (R/S)
Merc: 2000 *Price:* $240 (—/S)

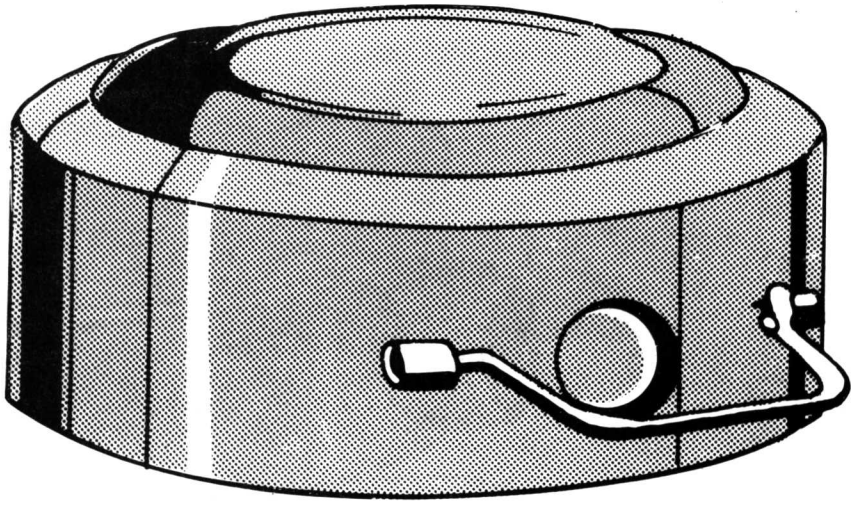

TM-57 AT Mine

Type	*Damage*	*Pen*
TM-57	C:18, B:40	30C

TM-57 AT Mine: Like the TM-46, the TM-57 is a conventional, steel-case antitank mine. The TM-57, however, is smaller and requires 150 kilograms or more for detonation. One person may emplace this mine in five minutes and conceal it in an additional five minutes.

Wt: 9.5 kg
Twilight: 2000 *Price:* $215 (R/S)
Merc: 2000 *Price:* $215 (—/S)

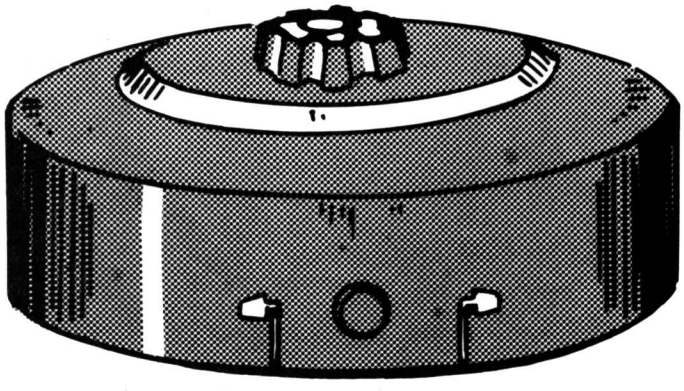

Wojo AT Mine

Type	*Damage*	*Pen*
Wojo AT	C:18, B:40	20C

Wojo AT Mine: This is a relatively simple antivehicle mine produced by the Wojchiechowiecz armaments factory in Krakow. This mine requires the pressure of 150 kilograms or more to trigger it. Due to its primitive fusing, this mine will misfire on a 1D10 roll of 10. One person may emplace this mine in five minutes and conceal it in an additional five minutes. The Wojo AT Mine is by built by small, handwork factories in the world of **Twilight: 2000**. Wojo products are unavailable in **Merc: 2000** or other games.

Wt: 10 kg

Twilight: 2000 *Price:* $350 (C/C)

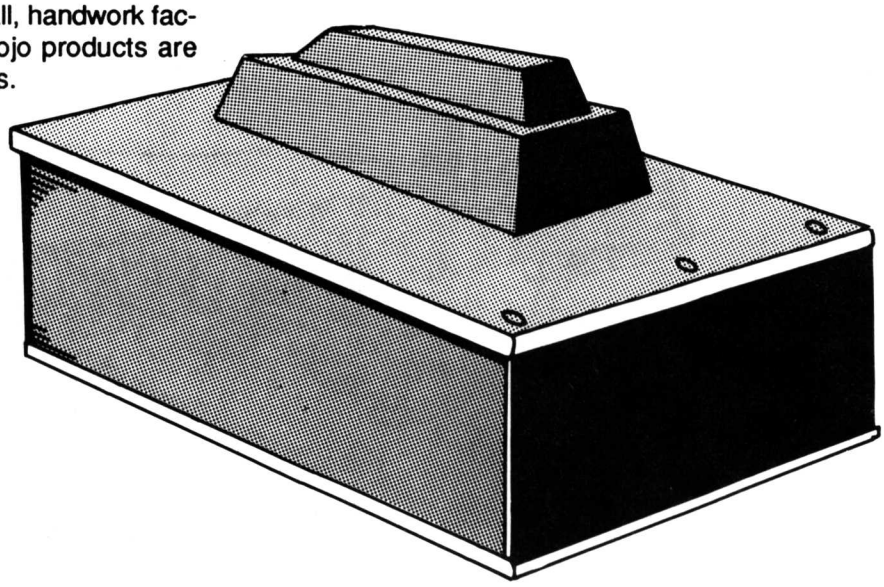

YaM5 AT Mine

Type	*Damage*	*Pen*
YaM5 AT	C:16, B:40	24C

YaM5 AT Mine: This is a small, Soviet-built antitank mine requiring 136 kilograms to detonate. One person may emplace this mine in five minutes and conceal it in an additional five minutes.

Wt: 8 kg

Twilight: 2000 *Price:* $200 (R/S)

Merc: 2000 *Price:* $175 (—/S)

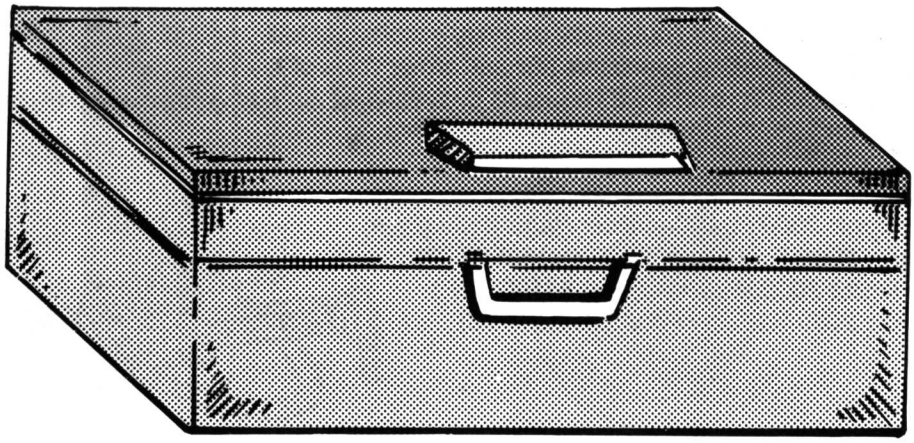

HAFLA (*Handflampatronen*)

Type	*ROF*	*Rld*	*Rng*	*Round*	*Damage*	*Pen*
HAFLA	1	*	10	ICEN	C:1, B:12	Fragments

*Single-shot disposable. Cannot be reloaded.

HAFLA (*Handflampatronen*): The *Handflampatronen* (hand flame cartridge) is a single-shot, disposable flamethrower manufactured in Germany. The weapon projects a slug which scatters white phosphorus fragments inside its burst radius. Handle these fragments as detailed under Burns on page 198 of **Twilight: 2000**.

Wt: 0.6 kg
***Twilight: 2000** Price*: $400 (R/—)
***Merc: 2000** Price:* $600 (R/—)

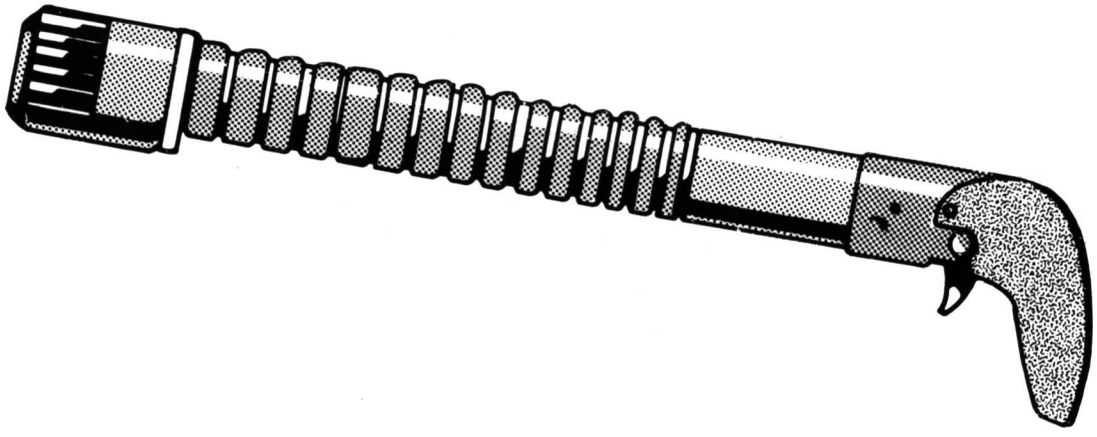

LPO-50 Flamethrower

						—*Recoil*—		
Weapon	*ROF*	*Dam*	*Pen*	*Blk*	*Mag*	*SS*	*Brst*	*Rng*
LPO-50	SA	*	Nil	4	5	4	—	5

*Damage by burning gasoline is covered on page 198 of **Twilight: 2000**.

LPO-50 Flamethrower: Flamethrowers squirt a stream of flammable fuel at their targets, using compressed gas (nitrogen is preferred) as a propellant. This stream may be "cold" (unignited) or "hot" (ignited) at the firer's option. Ignition is achieved by a "glow plug" attachment at the nozzle.

Each hot shot covers an area four meters on a side with fuel which will continue to burn for one minute (12 combat phases) or until extinguished (other flammable items in the area may be ignited and burn longer). The fuel is usually napalm (jellied gasoline) but can be ordinary gasoline (at half the ranges noted). Fuel cannisters have an armor value of 1, and a hit on one is resolved as a fuel hit on a vehicle.

Fuel Cannister Wt: 20 kg
Weapon Wt: 23 kg
Mag: 5
***Twilight: 2000** Fuel Cannister Price:* $300 (R/—)
***Merc: 2000** Fuel Cannister Price:* $350 (—/S)
***Twilight: 2000** Weapon Price:* $1100 (S/R)
***Merc: 2000** Weapon Price:* $1200 (—/S)

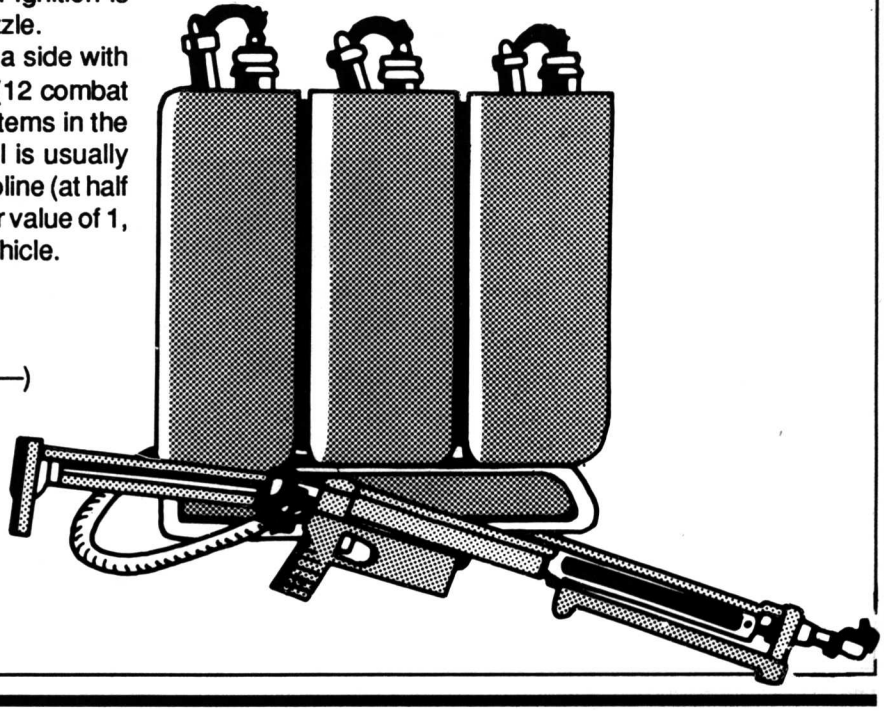

M9A2 Flamethrower

M9A2 Flamethrower: The M9A2 is an American backpack flamethrower.

Fuel Cannister Wt: 20 kg
Weapon Wt: 23 kg
Mag: 5
***Twilight: 2000** Fuel Cannister Price:* $300 (S/—)
***Merc: 2000** Fuel Cannister Price:* $375 (—/S)
***Twilight: 2000** Weapon Price:* $1100 (S/—)
***Merc: 2000** Weapon Price:* $1400 (—/S)

						—Recoil—		
Weapon	*ROF*	*Dam*	*Pen*	*Blk*	*Mag*	*SS*	*Brst*	*Rng*
M9A2	SA	*	Nil	4	5	4	—	5

*Damage by burning gasoline is covered on page 198 of **Twilight: 2000**.

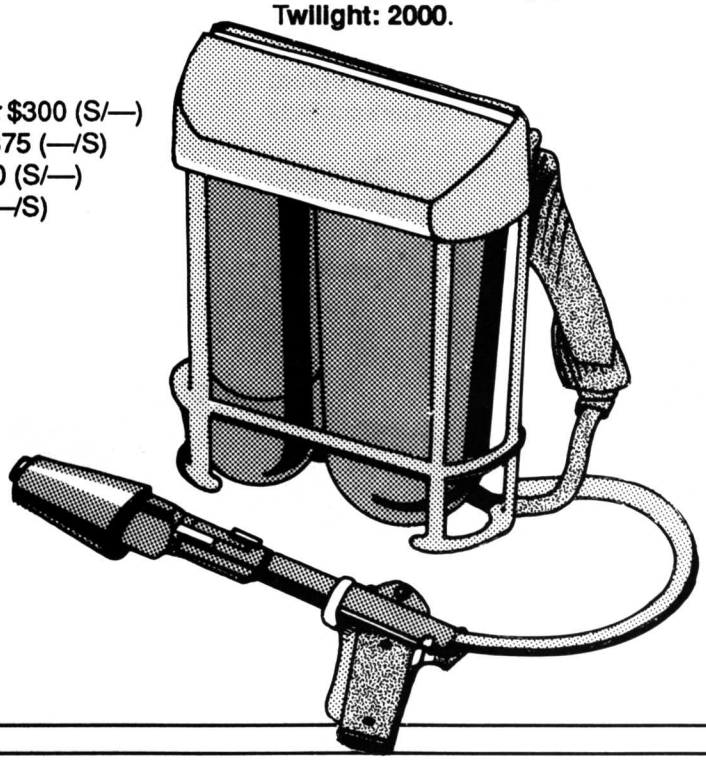

TPO-50 Flamethrower

TPO-50 Flamethrower: The TPO-50 is a trailer-mounted Soviet flamethrower.

Wt: 170 kg
Mag: 15
***Twilight: 2000** Weapon Price:* $4500 (—/R)
***Merc: 2000** Weapon Price:* $4000 (—/R)

						—Recoil—		
Weapon	*ROF*	*Dam*	*Pen*	*Blk*	*Mag*	*SS*	*Brst*	*Rng*
TPO-50	SA	*	Nil	4	15	4	—	5

*Damage by burning gasoline is covered on page 198 of **Twilight: 2000**.

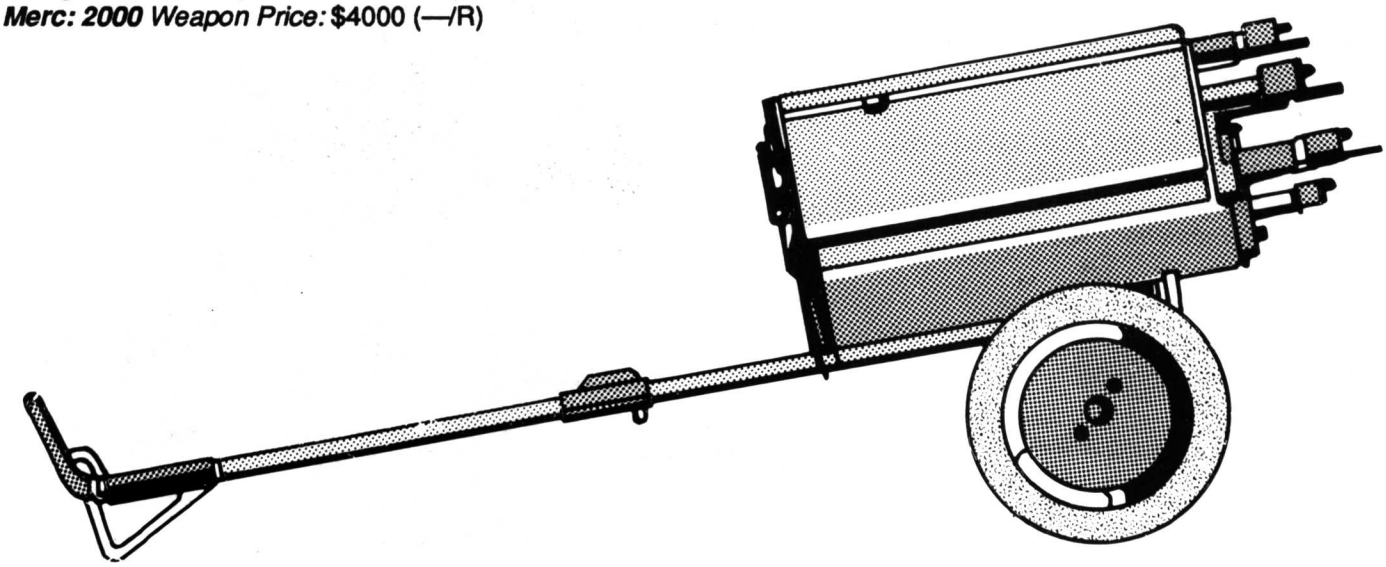

122mm Rocket

Type	*Round*	*Rng*	*Damage*	*Pen*
122mm rocket	HE	—	C:16, B:44	1C
IFR: 11 km	CHEM	—	C:4, B:30	Nil
Rld: 2	WP	—	C:3, B:44	Nil

122mm Rocket: During the Vietnam War, 122mm rockets were set up on improvised launchers (often nothing more than a convenient rock or a couple of sandbags) and fired singly or in groups. Accuracy was terrible, but since the targets were cities and large military bases, that was not viewed as a great disadvantage. Irregular forces in several subsequent conflicts made use of the technique.

The statistics below are for the shortened, one-section version of the 122mm rocket (a second section is attached to rockets fired from a launcher).

All shots fired count as indirect fire, and target corrections are not possible. Deviations are doubled.

Wt: 46 kg
Twilight: 2000 *Price:* $350 (—/S)
Merc: 2000 *Price:* $250 (—/S)

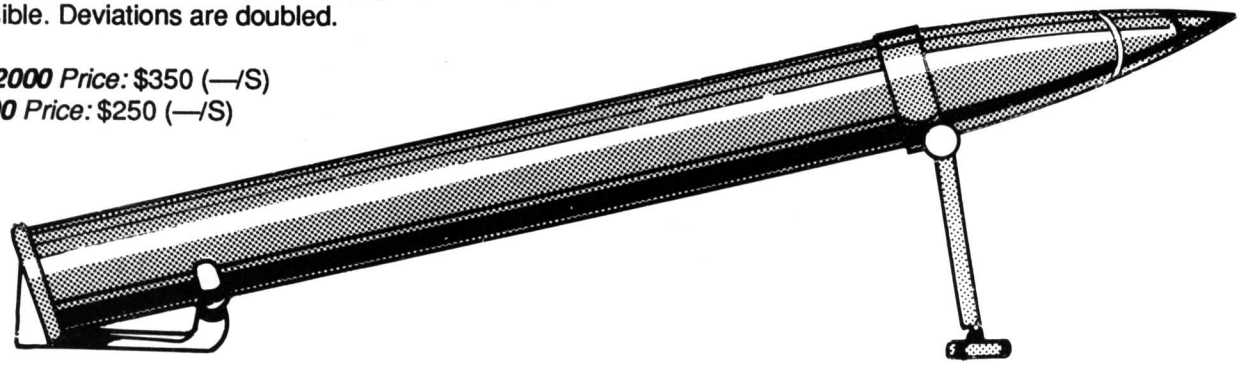

RPU-14 140mm MRL

Type	*Round*	*Rng*	*Damage*	*Pen*
RPU-14 MRL	HE	—	C:12, B:32	1C
IFR: 9.8 km	CHEM	—	C:4, B:24	Nil
Rld: 10	WP	—	C:3, B:32	Nil

RPU-14 140mm MRL: This is the towed version of the 16-tube BM-14 multiple rocket launcher system developed by the Soviets for use by paratroop units. This weapon's rate of fire is six rockets per five-second combat phase. All shots fired by this weapon count as indirect fire, and target corrections are not possible. Deviations are doubled.

Crew: 6
Rocket Wt: 39.6 kg
Launcher Wt: 1.2 tons
Twilight: 2000 *Rocket Price:* $320 (—/S)
Merc: 2000 *Rocket Price:* $225 (—/S)
Twilight: 2000 *Launcher Price:* $15,000 (—/R)
Merc: 2000 *Launcher Price:* $10,000 (—/R)

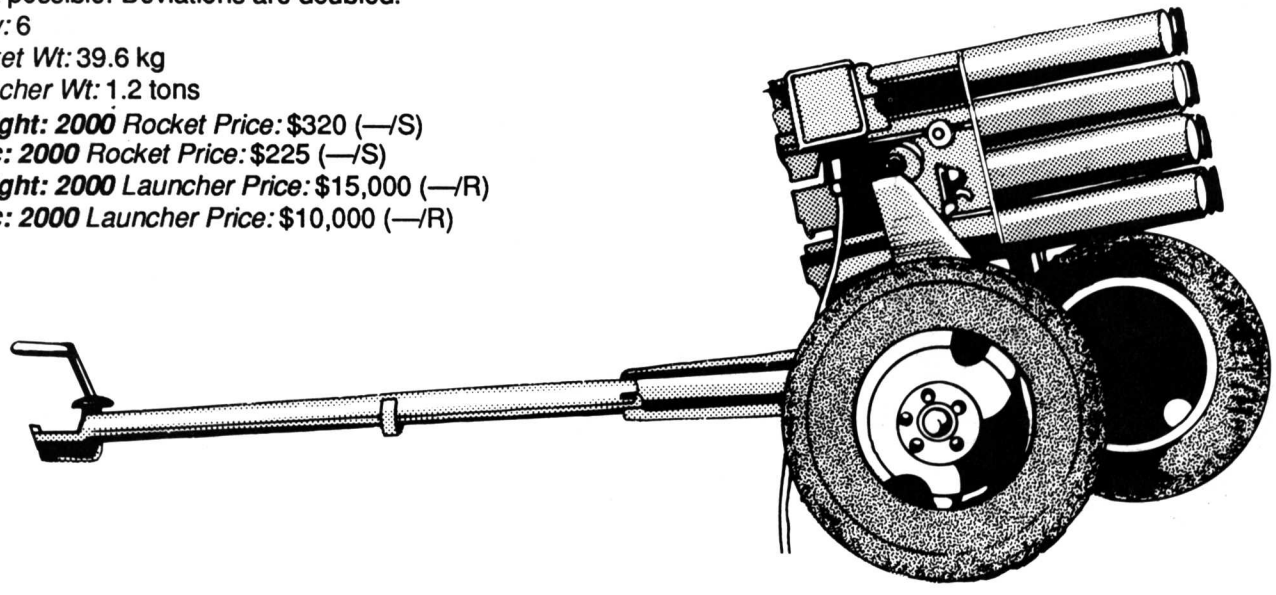

Type 63 107mm MRL

Type	*Round*	*Rng*	*Damage*	*Pen*
Type 63 MRL	HE	—	C:4, B:24	4C
IFR: 8 km				
Rld: 20				

Type 63 107mm MRL: The Type 63 is a Chinese-designed multiple rocket launcher system, firing 12 107mm rockets individually or in volleys. All shots fired by this weapon count as indirect fire, and target corrections are not possible. Deviations are doubled.

Crew: 8
Rocket Wt: 19.5 kg
Launcher Wt: 800 kg
Twilight: 2000 *Rocket Price:* $650 (—/S)
Merc: 2000 *Rocket Price:* $400 (—/S)
Twilight: 2000 *Launcher Price:* $20,000 (—/S)
Merc: 2000 *Launcher Price:* $12,000 (—/S)

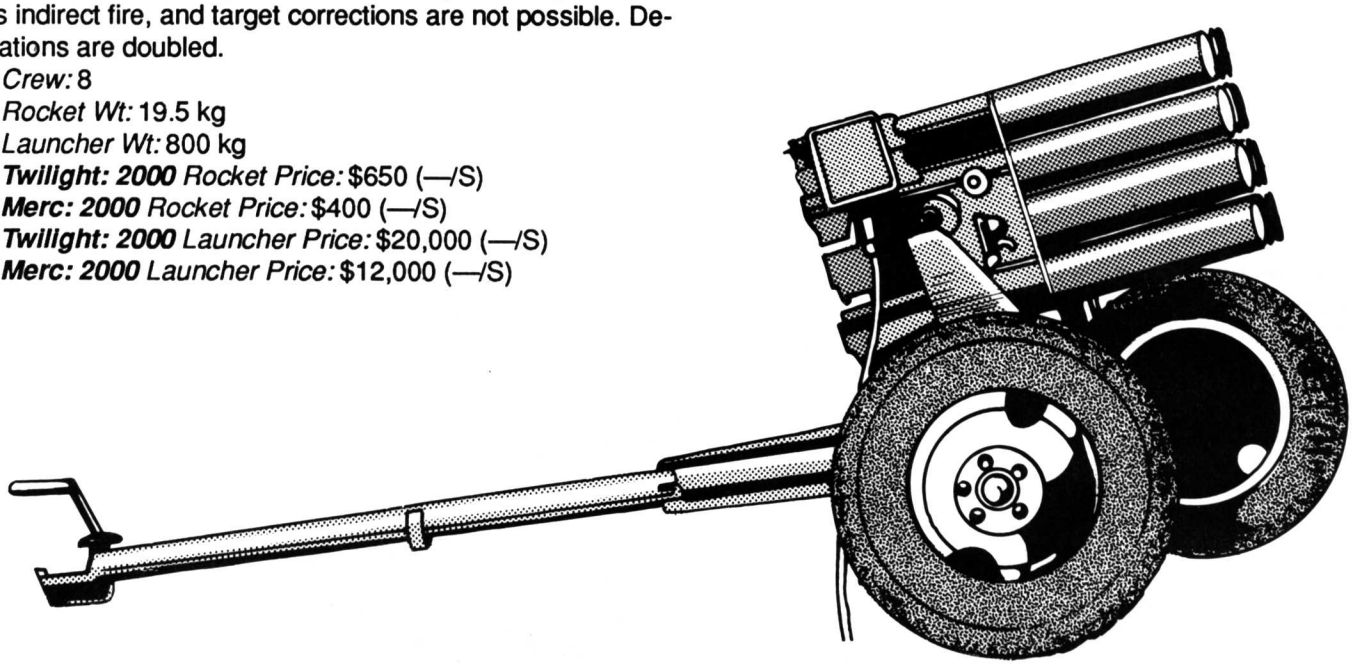

WP-8 140mm MRL

Type	*Round*	*Rng*	*Damage*	*Pen*
WP-8 MRL	HE	—	C:12, B:32	1C
IFR: 9.8 km	CHEM	—	C:4, B:24	Nil
Rld: 8	WP	—	C:3, B:32	Nil

WP-8 140mm MRL: The WP-8 is an 8-tube version of the RPU-14 multiple rocket launcher. All shots fired by this weapon count as indirect fire, and target corrections are not possible. Deviations are doubled.

Crew: 4
Rocket Wt (All Types): 39.6 kg
Launcher Wt: 800 kg
Twilight: 2000 *Rocket Price:* 320 (—/S)
Merc: 2000 *Rocket Price:* $225 (—/S)
Twilight: 2000 *Launcher Price:* $12,000 (—/S)
Merc: 2000 *Launcher Price:* $10,000 (—/S)

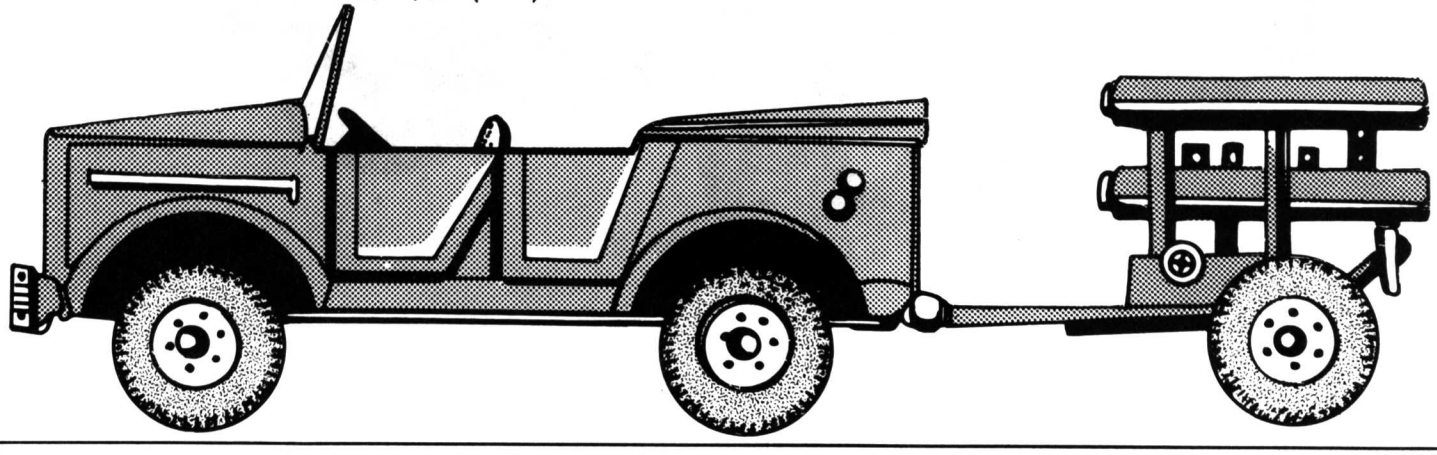

RM-70 122mm MRL

RM-70 122mm MRL: The RM-70 is a 40-tube, 122mm multiple rocket launcher mounted on a Czech Tatra truck chassis with an armored cab (armor factor 3) for protection against fragments during counterbattery fire. The truck also carries an additional 40 rockets in a rack, ready to be slipped into position by machinery (Rld 4). The reload rate given below refers to the time it takes to reload the truck by hand after all rockets have been fired. All shots fired by this weapon count as indirect fire, and target corrections are not possible.

Crew: 6-8
Rocket Wt: 77 kg
Launcher Wt: 500 kg
Twilight: 2000 *Rocket Price:* $350 (—/S)
Merc: 2000 *Rocket Price:* $250 (—/S)
Twilight: 2000 *Launcher Price:* $100,000 (—/R)
Merc: 2000 *Launcher Price:* $80,000 (—/R)

Type	*Round*	*Rng*	*Damage*	*Pen*
RM-70 MRL	HE	—	C:16, B:44	1C
IFR: 21 km	CHEM	—	C:4, B:30	Nil
Rld: 40	WP	—	C:3, B:44	Nil

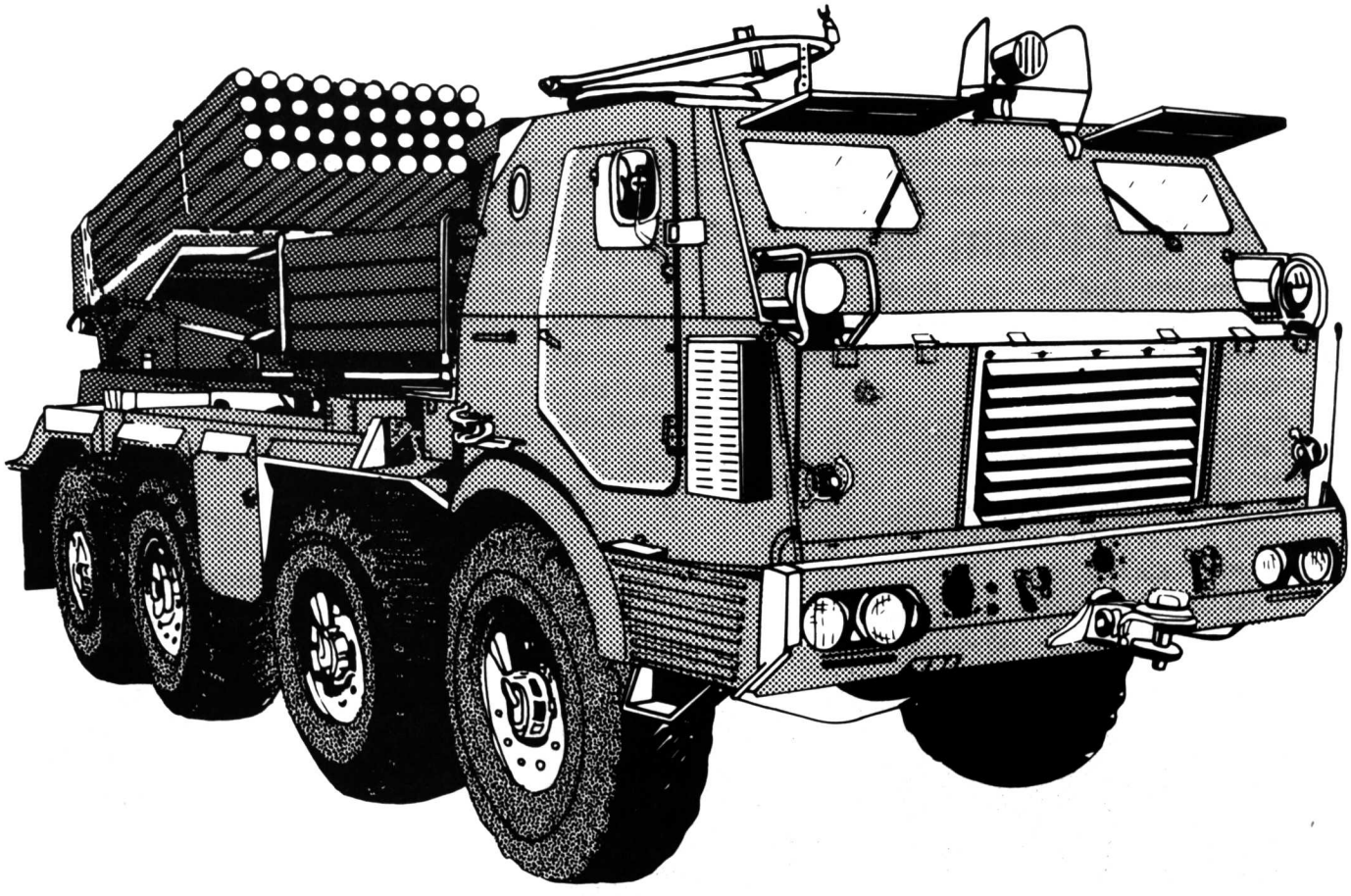

BM-27 220mm MRL

BM-27 220mm MRL: The BM-27, nicknamed the *Urugan* (hurricane) by Russian soldiers, is one of the most recent additions in a long line of multiple rocket launchers dating back to the WWII *Katyusha*. The 16-tube launcher is mounted on the back of a heavy truck similar in performance to the US five-ton truck. All shots fired by this weapon count as indirect fire, and target corrections are not possible.

Crew: 10
Rocket Wt: 360 kg
Launcher Wt: 22.5 tons
Twilight: 2000 *Rocket Price:* $800 (—/R)
Merc: 2000 *Rocket Price:* $600 (—/R)
Twilight: 2000 *Launcher Price:* $45,000 (—/R)
Merc: 2000 *Launcher Price:* $35,000 (—/R)

Type	*Round*	*Rng*	*Damage*	*Pen*
BM-27 MRL	HE	—	C:26, B:38	4C
IFR: 40 km	CHEM	—	C:4, B:30	Nil
Rld: 24	WP	—	C:4, B:46	Nil
	ICMDP	—	B:60	Grenade*
	FASCAM	—	B:124	Mine

*Use 203mm ICMDP Attack Table on page 259.

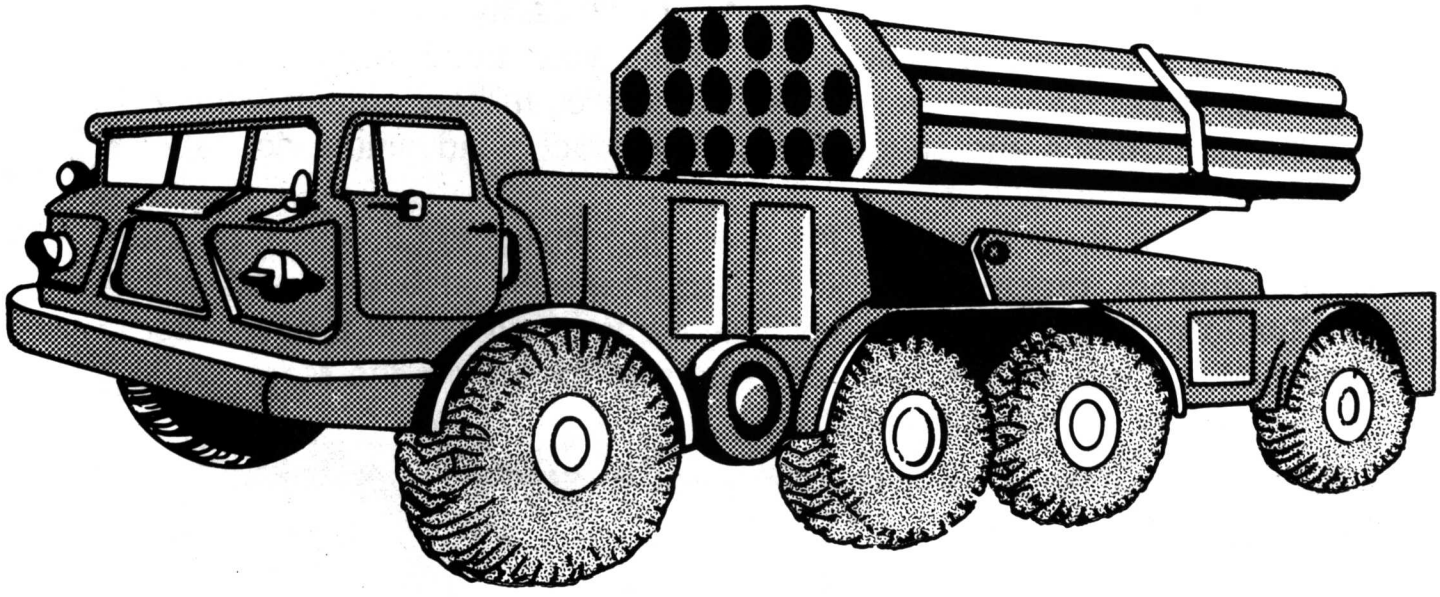

MERC: 2000 GAZETTEER

The **Gazetteer** is a sourcebook for global hot spots in the strife-torn world of **Merc: 2000**. From the coup in Tonga to the border dispute between the Russian Republic and Japan; from the Second Nigerian Civil War to the Basque insurgency in Spain; from the frigid steppes of central Asia to the steaming jungles of South America; from the battlefields of west Africa to the crime-torn city streets of America; the **Gazetteer** covers them all. Every aspect of warfare in the year 2000 and beyond is presented, ranging from brushfire wars in remote parts of the globe, to terrorist activities in our own backyard.

Every major world trouble-spot in the year 2000 is covered with maps, a background summary of the conflict, military organizations of the participants and suggestions for conduct of adventure scenarios as part of that conflict.

Although it is intended for use with **Merc: 2000**, most of the information presented in the **Gazetteer** can also be used with **Twilight: 2000**, GDW's role-playing game of survival in a devastated world. No player or referee can afford to be without the **Merc: 2000 Gazetteer. GDW 2008—$14.00**



GDW

P.O. Box 1646
Bloomington, IL 61702-1646

HEAVY WEAPONS HANDBOOK™

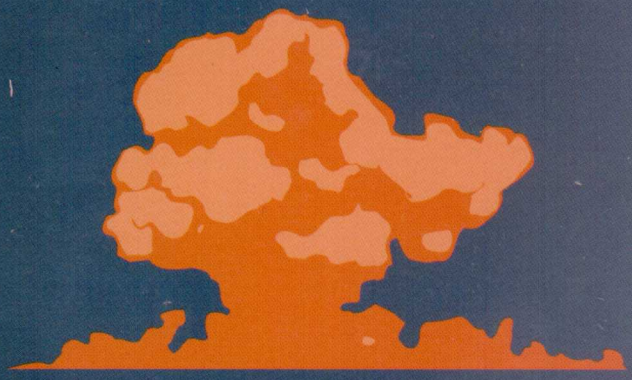

The **Heavy Weapons Handbook** finishes what **Infantry Weapons of the World** started, by rating over 170 rocket launchers, grenade launchers, antitank and antiaircraft missile launchers, towed field, antitank, and antiaircraft guns, grenades, mines and other support weapons for **Twilight: 2000**. Infantry units armed only with rifles and machineguns are only half equipped, the **Heavy Weapons Handbook** provides the rest of what you'll need.

Weapons covered range from man-portable missile launchers such as the LRAC F1, the Eryx, and the venerable American bazooka, antitank missiles ranging from the aging SS-11 sufrace-to-surface missile to the FOG-M (Fiber 0ptic Guided Missile), and towed antiaircraft guns from the Swiss 20mm Oerlikon to the Soviet 130mm AA gun. Antiaircraft missiles such as Stinger, Blowpipe, and Mistral are also included. The **Heavy Weapons Handbook** also includes antipersonnel and antitank mines, and recoilless rifles ranging in size from the US M18A1 57mm to the Soviet B-11 107mm.

Each weapon is illustrated, and each entry contains all information needed for use in the **Twilight: 2000** game system, including full combat statistics, weight, price, and availability ratings both for the weapon and its ammunition.

The weapons covered in the **Heavy Weapons Handbook** are usable with **Twilight: 2000**, but also with **Merc: 2000**, **Cadillacs and Dinosaurs**, and **Dark Conspiracy**.

TM2011 12.00

0 86079 02011 8

Made in U.S.A.
Printed in U.S.A.

ISBN 1-55878-100-5
Copyright©1992 GDW, Inc.
All rights reserved.

Twilight: 2000™ is a trademark of GDW, Inc.

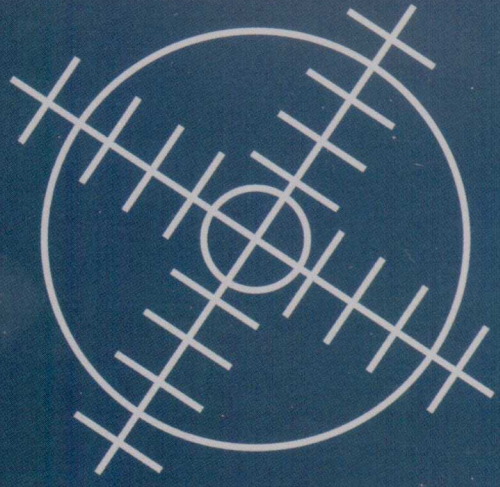

TWILIGHT: 2000™

GDW

P.O. Box 1646
Bloomington, IL 61702-1646